INSTALLATION INSTRUCTIONS

For R-BE-C70D/C80D/C90D/C100D-FFG

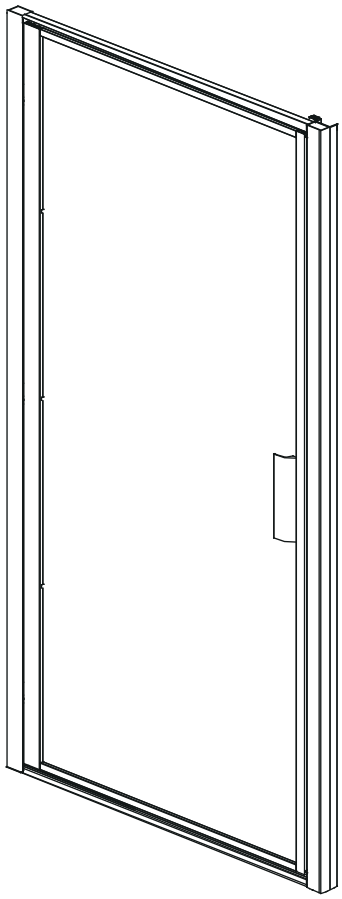

DOOR IN A RECESS

(page 1)

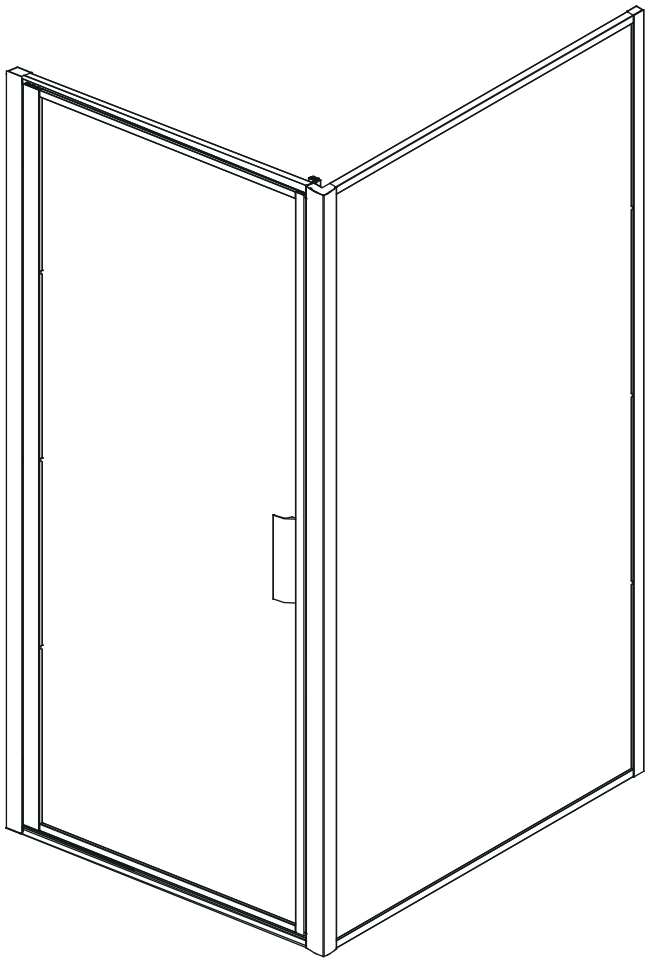

DOOR WITH SIDE PANEL

(page 8)

◆ General Information

Please inspect the product immediately upon receipt for transit damage, missing packs/parts or manufacturing fault. Damage reported later cannot be accepted.Please handle the product with care avoiding knocks and shock loading to all sides and edges of the glass.

Notes: Safety glass can not be re-worked.

Please read these instructions carefully before start of installation.

Special care should be taken when drilling walls to avoid hidden pipes or electrical cables.

Note: This product is heavy and may require two people to install.

Aftercare instructions

After use, your shower should be cleaned with soap and water. This is particularly important in hard water districts where insoluble lime salts may be deposited and allowed to build up. Cleaners of a gritty or abrasive nature should not be used. Care should be taken to avoid contact with strong chemicals such as organic solvents and strippers.

Glass cleaners can be used but with caution, if in doubt contact the manufacturer of the cleaner in question.

Please keep these instructions for aftercare and customer service details.

Tools Required

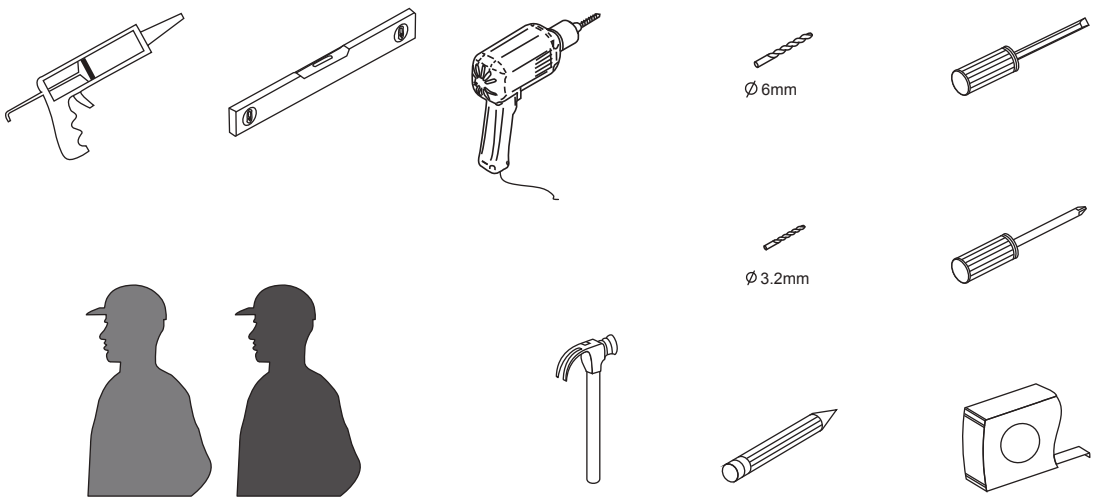

This product is heavy and may require two people to install.

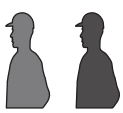

◆ Assembly Drawing

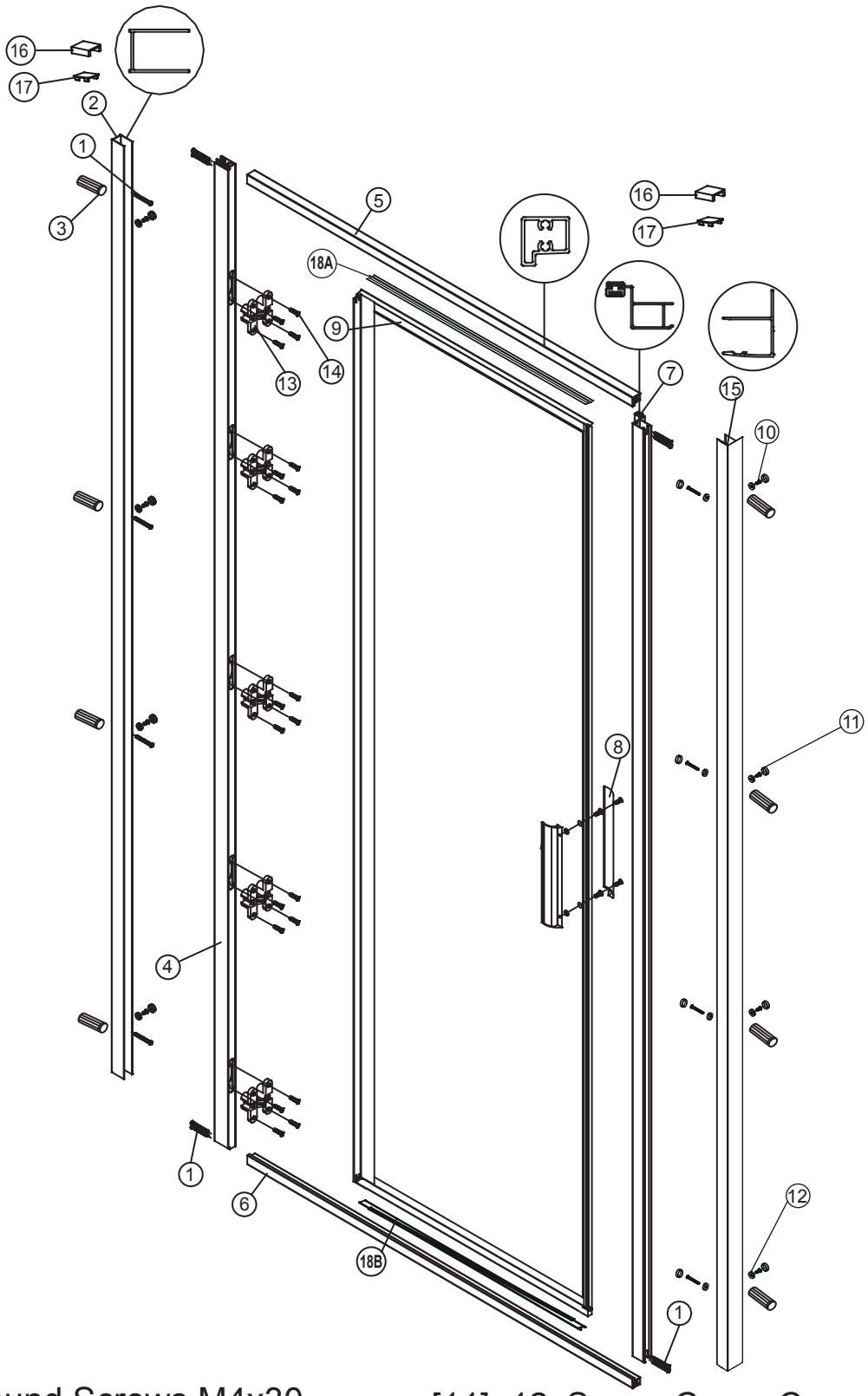

[1] 16xRound Screws M4x30
[2] 1xWall Profile
[3] 8xWall Plugs
[4] 1xHinge Profile
[5] 1xProfile
[6] 1xProfile
[7] 1xMagnetic Strip
[8] 1xHandle Set
[9] 1xDoor Panel
[10] 8xRound Screws M4x10
[11] 12xScrew Cover Caps
[12] 12xScrew Cover Caps Washer
[13] 5xHinge
[14] 20xScrews M4x18
[15] 1xF-Wall Profile
[16] 2xWall Profile Cap
[17] 2xProfile Caps
[18A] 1xTop PVC strip
[18B] 1xBottom PVC strip

Installation Steps

Step 1

Mark the location of the wall profile holes on the wall

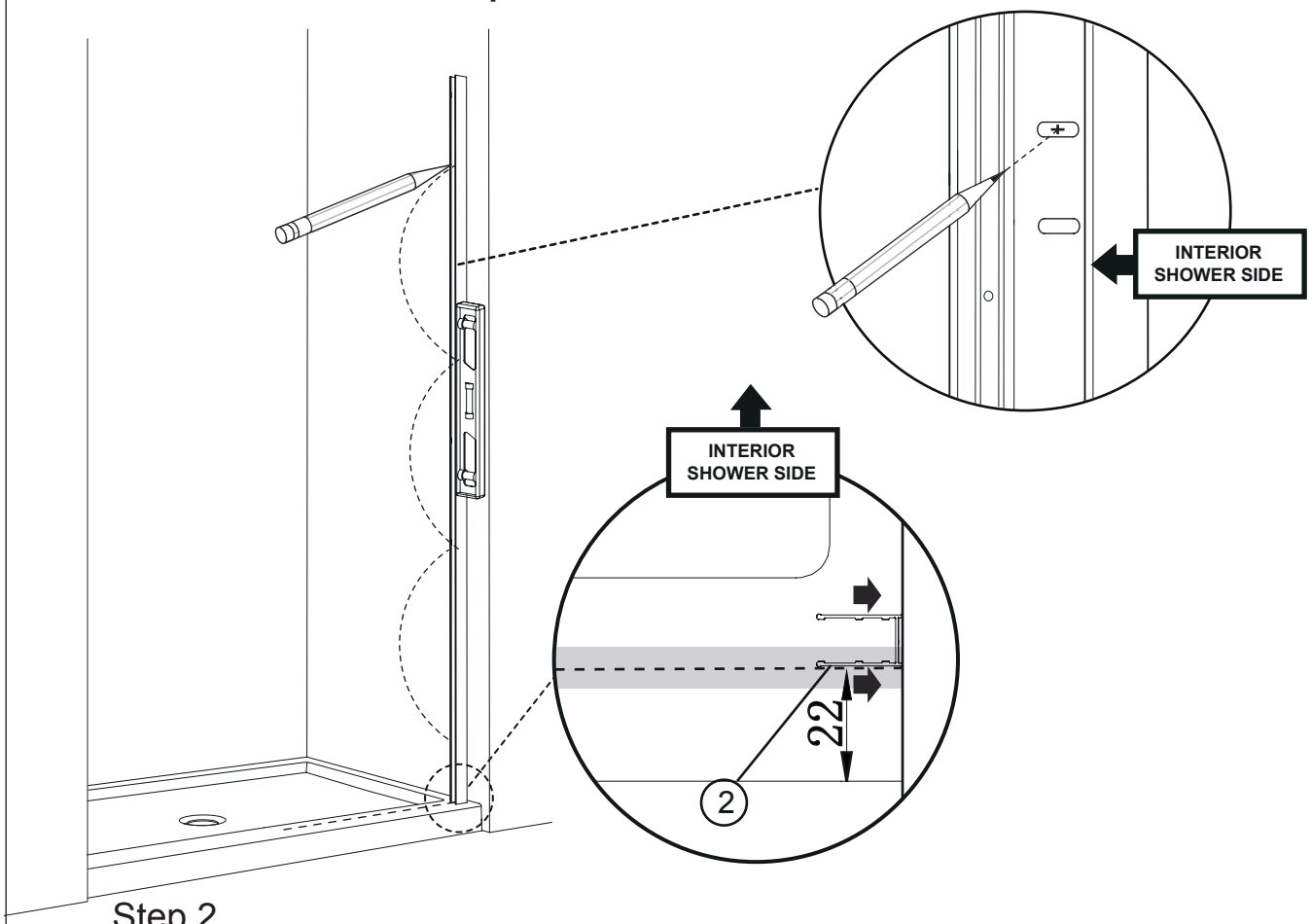

Step 2

Drill and install wall plugs on the wall

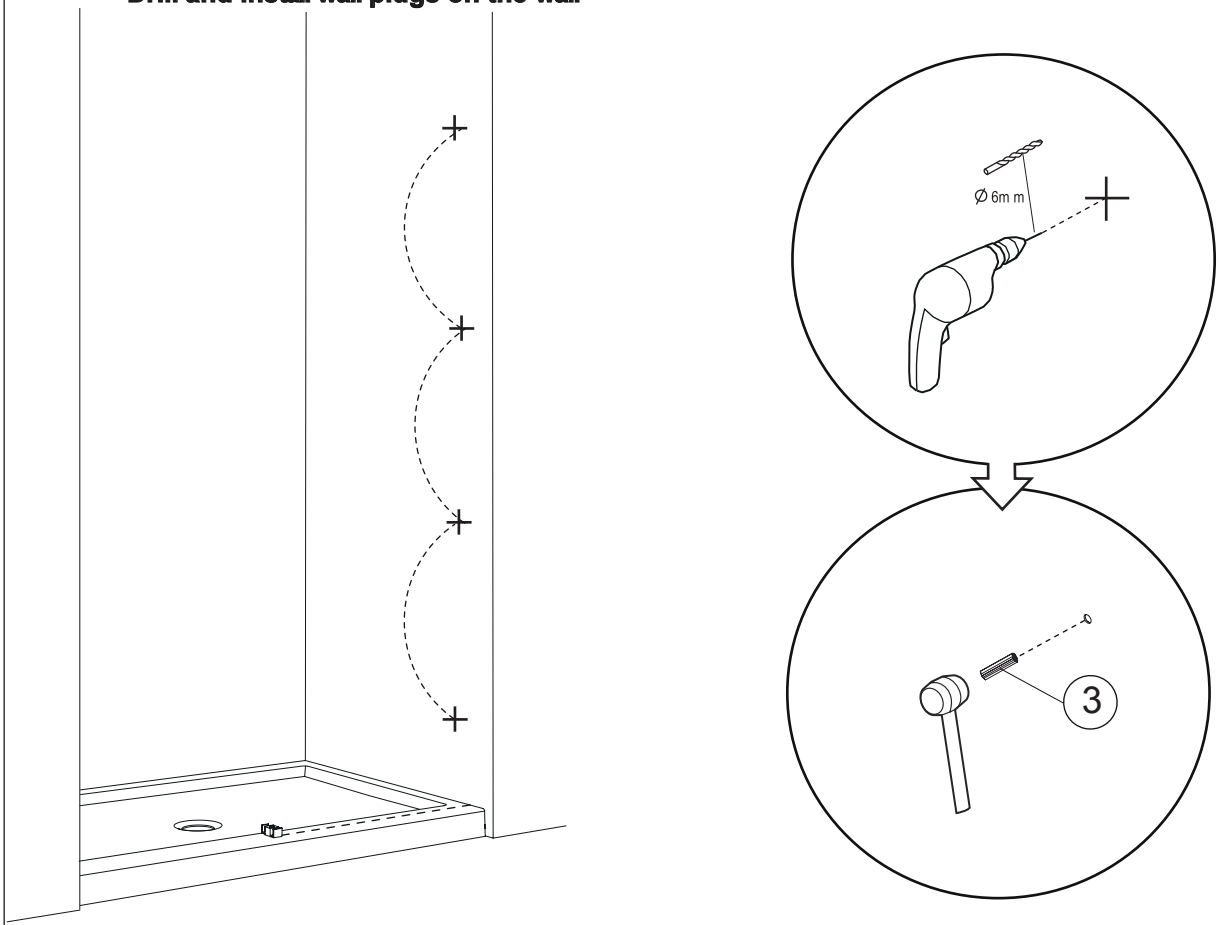

Make sure your measurements are correct and
that they match the tub and door before you drill the holes

Step 3

Mark the location of the wall profile holes on the wall

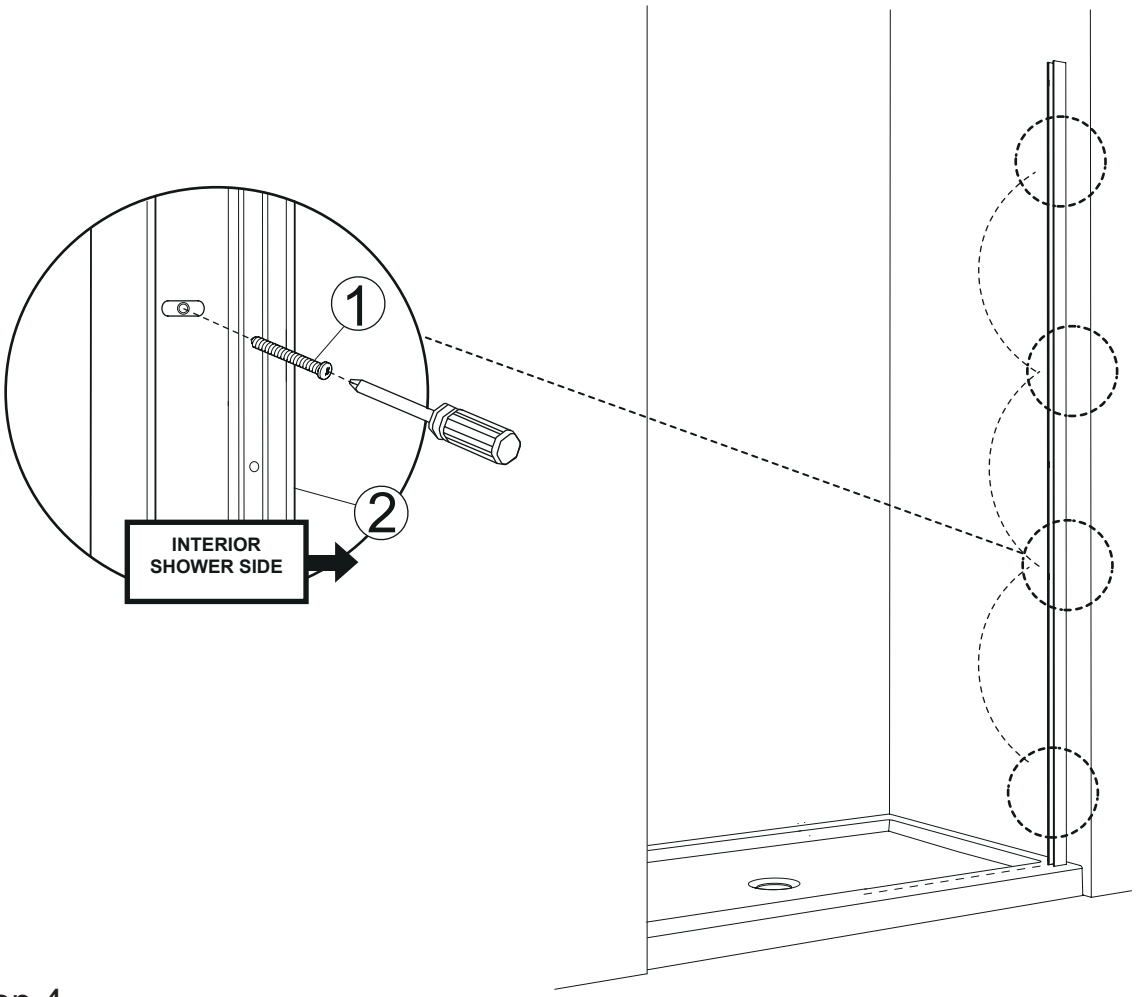

Step 4

Install the top aluminium profile

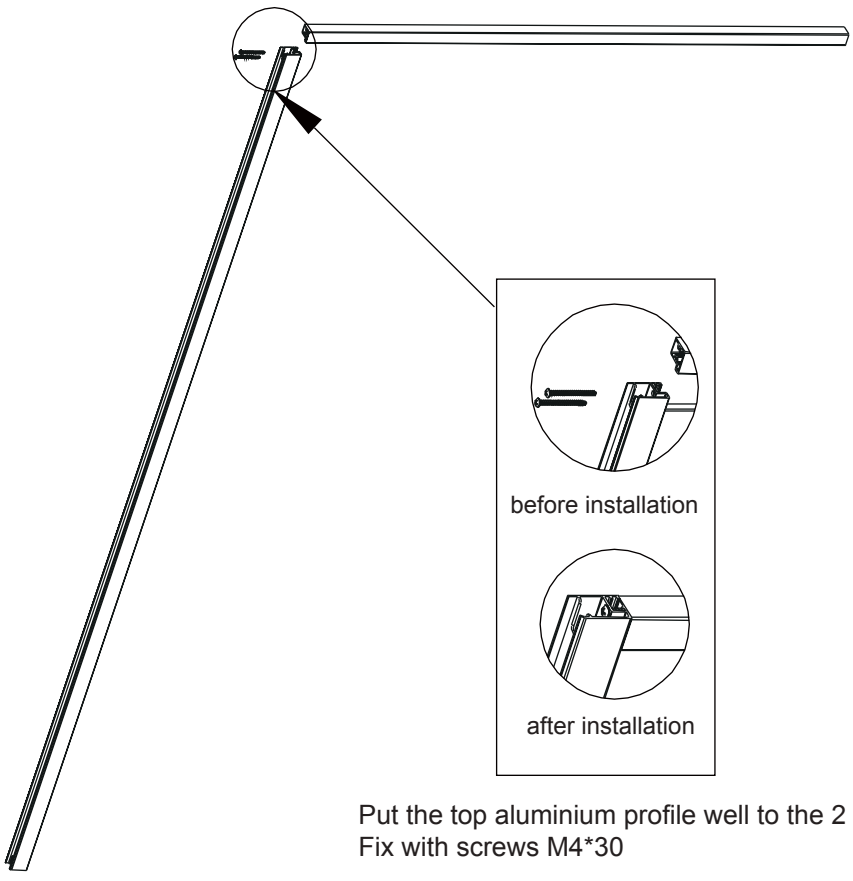

Put the top aluminium profile well to the 2 holes of front hinge profile
Fix with screws M4*30

Step 5

Install the bottom aluminium profile

Put the bottom aluminium profile well to the 2 holes of front hinge profile
Fix with screws M4*30top

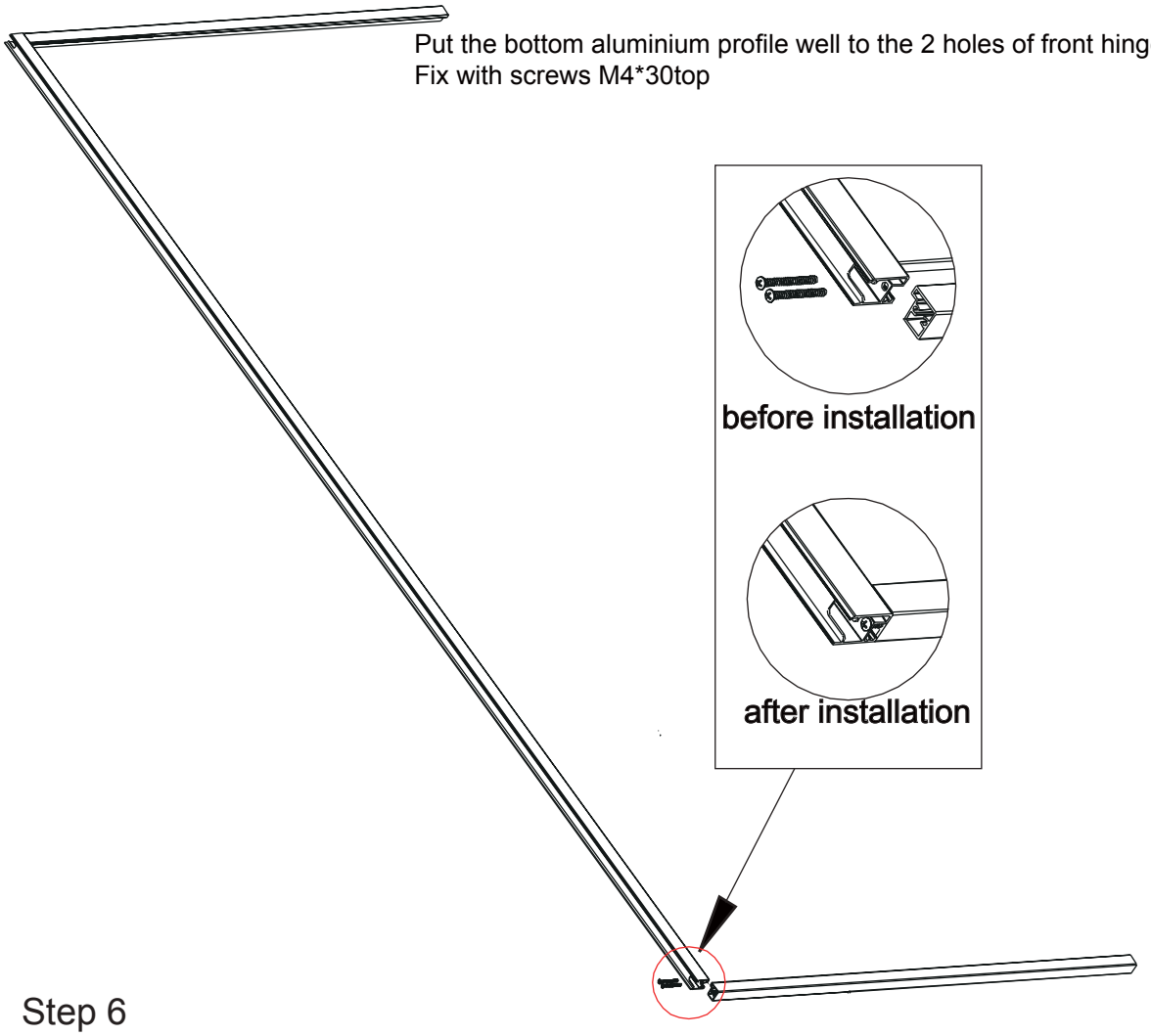

Step 6

Install magnetic aluminium profile

Put the top aluminium profile well to the 4 holes of magnetic alu.profile.
Fix with screws M4*30

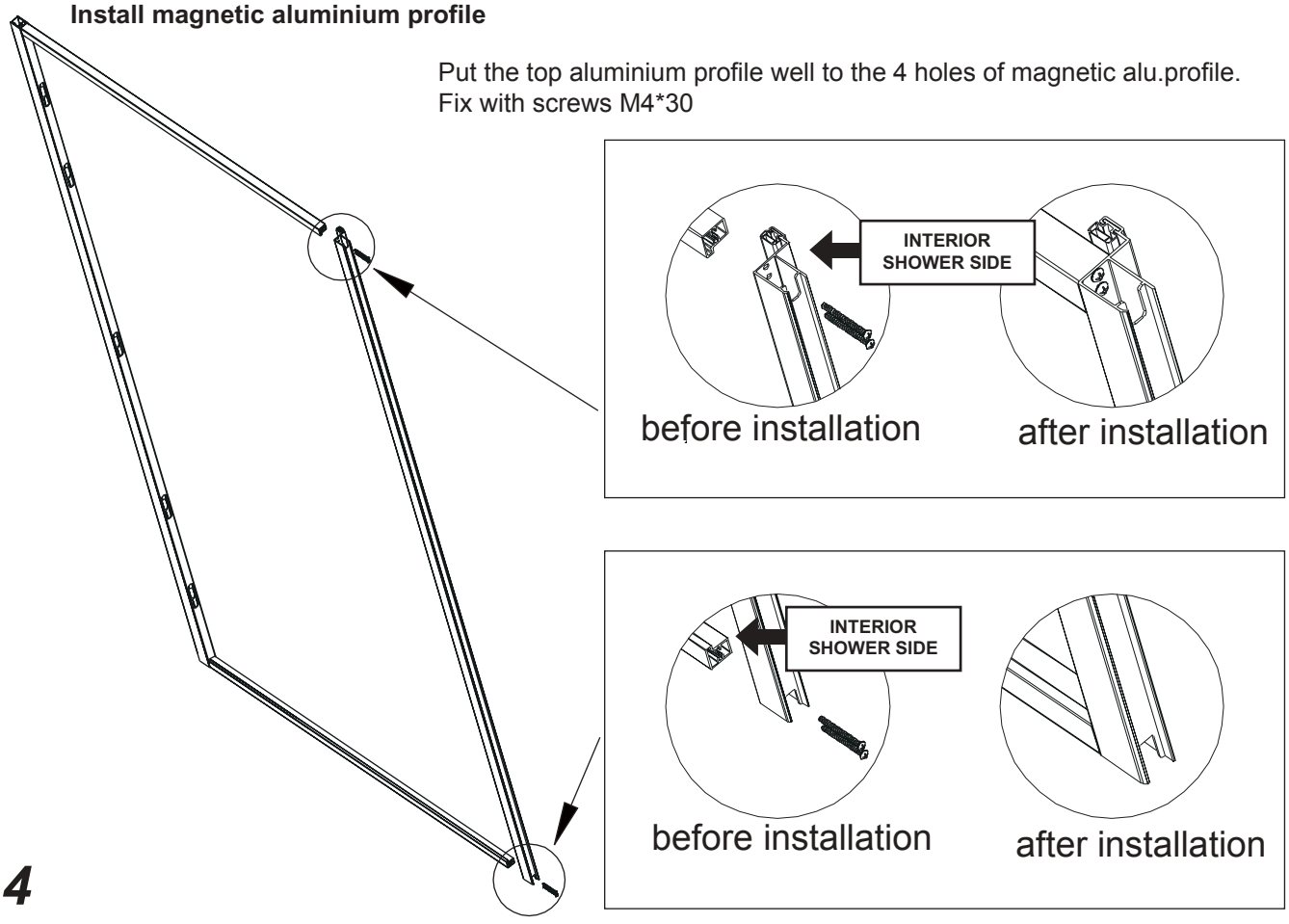

Step 7

Install the panel (B)

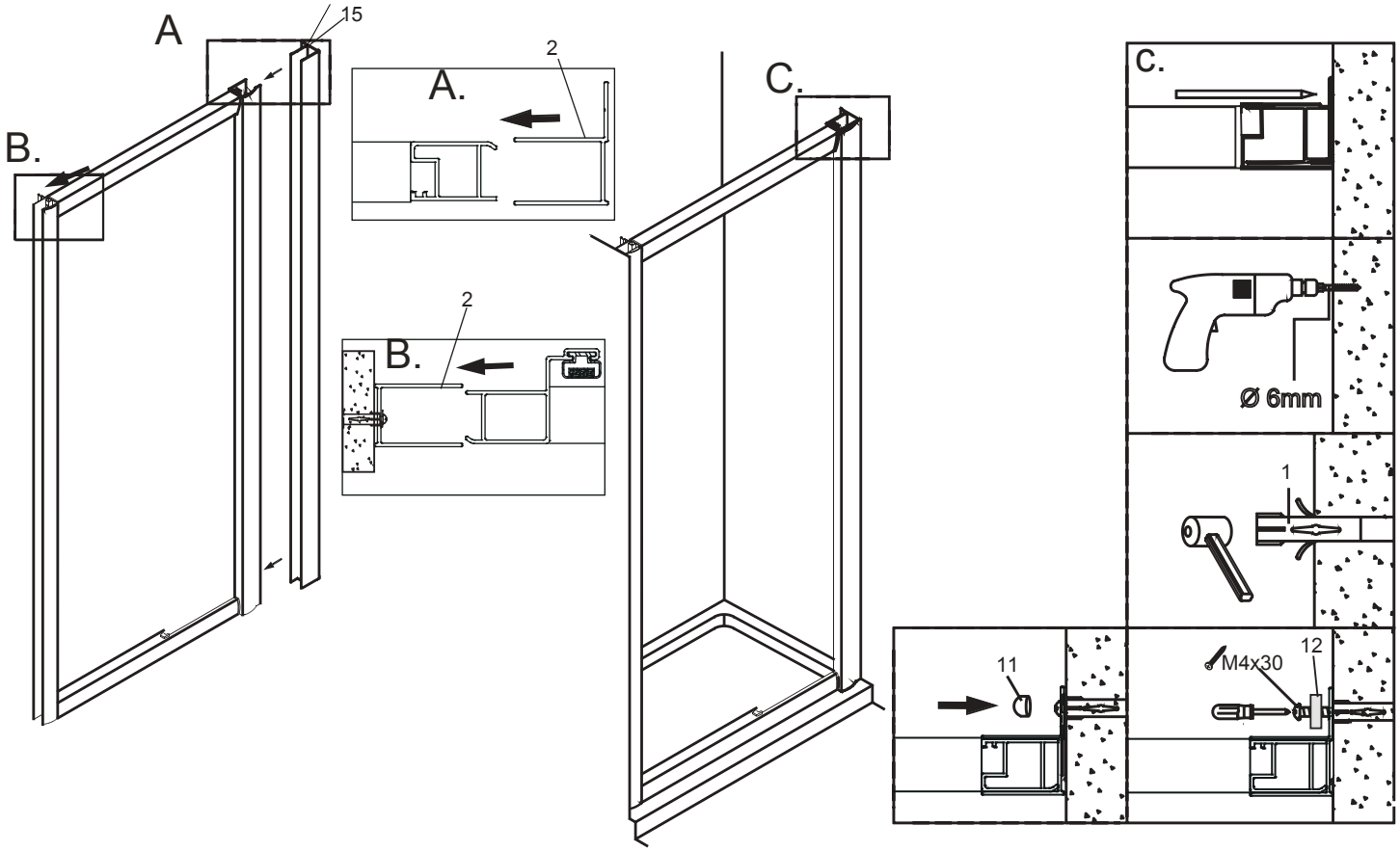

Step 8

Install hinges with the profile

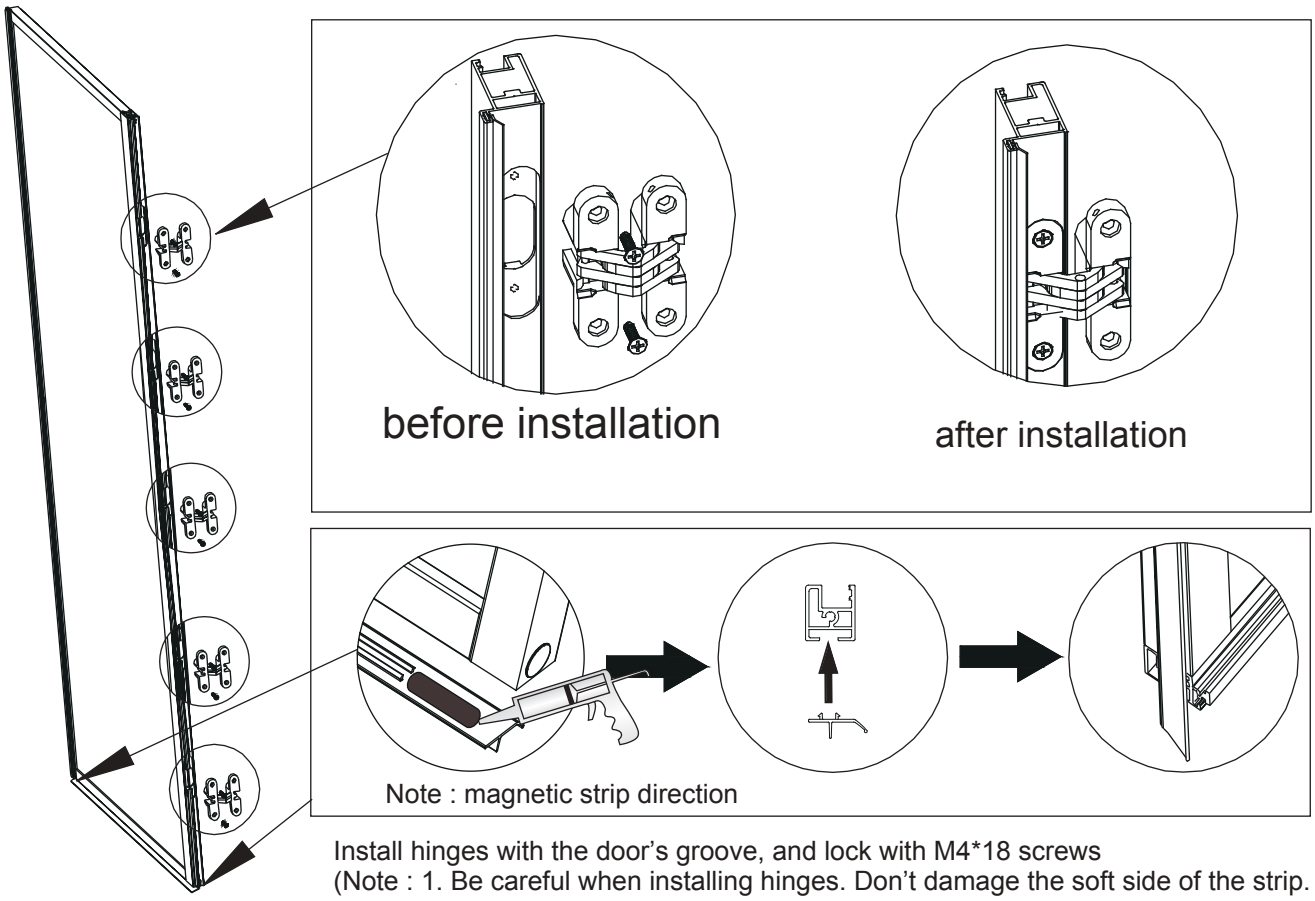

Install hinges with the door's groove, and lock with M4*18 screws
(Note : 1. Be careful when installing hinges. Don't damage the soft side of the strip.
2. The hinge opening direction should be different from closing magnetic direction.

Step 9

Install the door

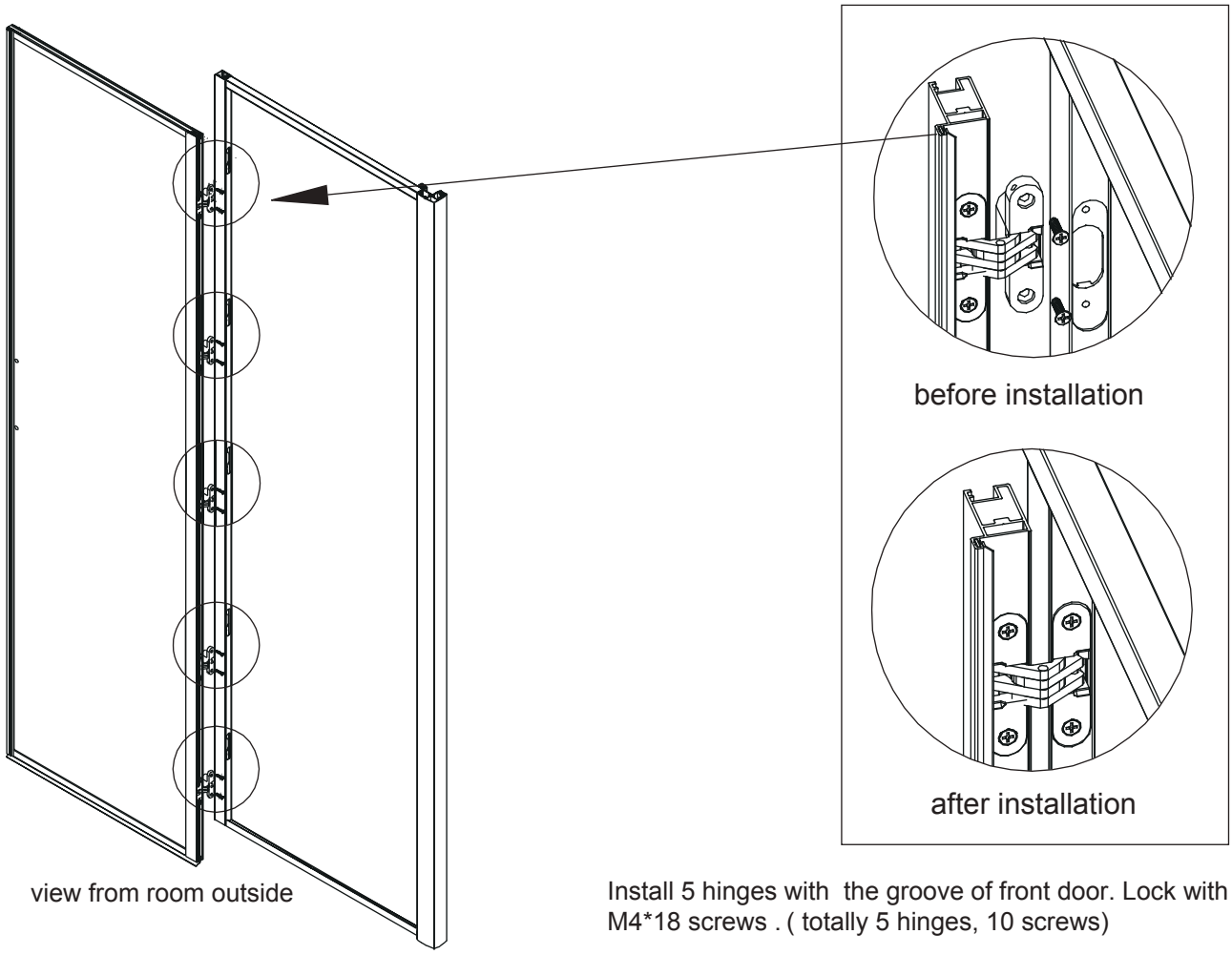

Install 5 hinges with the groove of front door. Lock with M4*18 screws . (totally 5 hinges, 10 screws)

Step 10

Adjust the shower enclosure

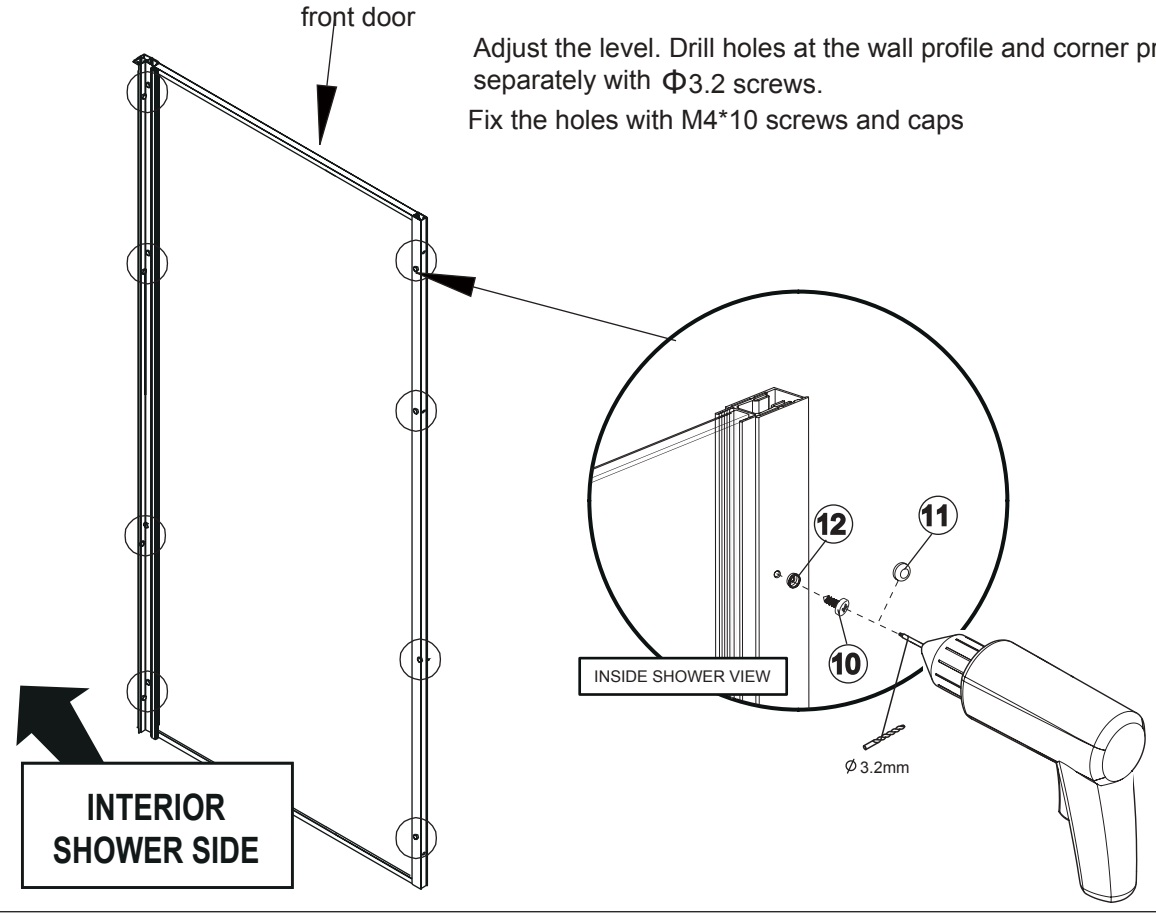

Adjust the level. Drill holes at the wall profile and corner profile separately with Φ3.2 screws.

Fix the holes with M4*10 screws and caps

Step 11

Install handle at the door

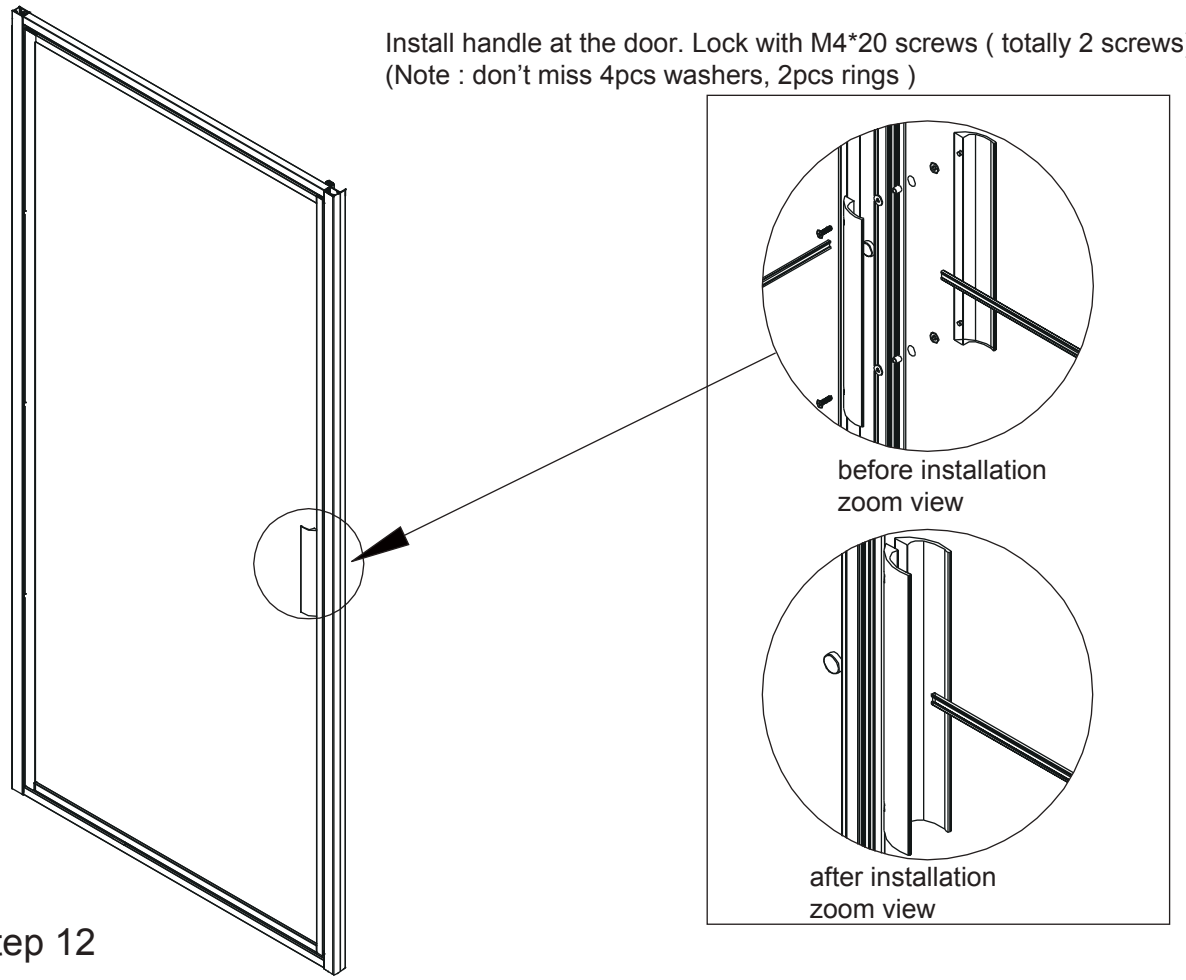

Step 12

Seal the shower enclosure

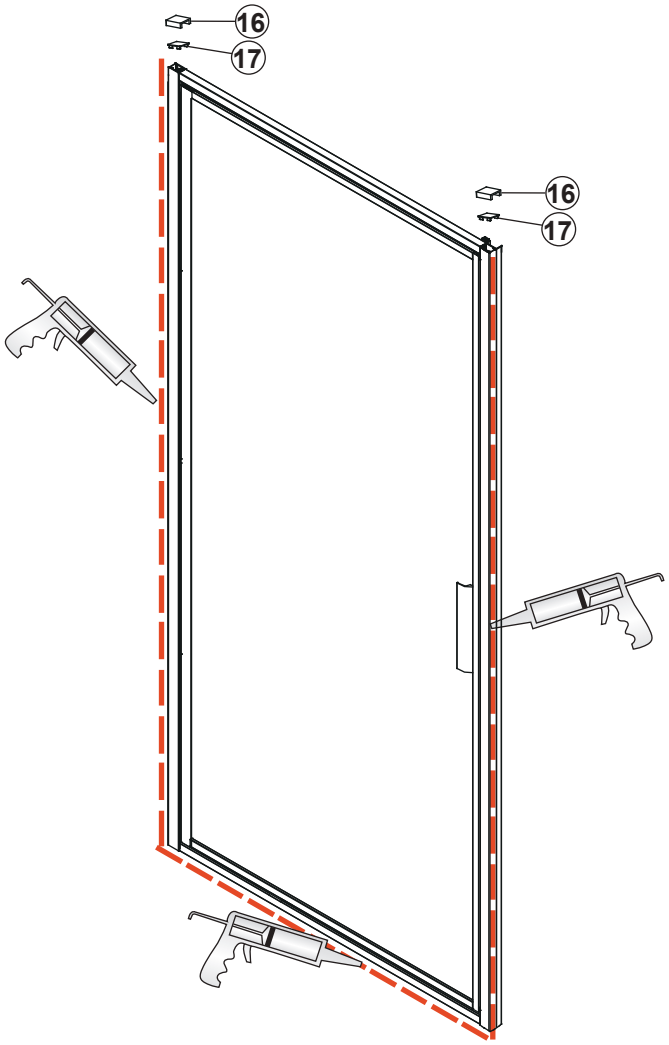

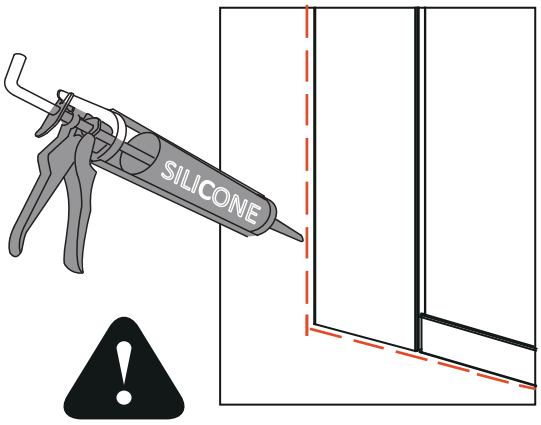

All sealant should be applied to the outside. Seal top to bottom between the wall profile and the wall.Seal the the bottom between the tray/floor and the glass/rail/profile and approx. 50mm vertically between the wall profile and the glass.





Allow 24 hours for silicone to dry before use.

◆ Assembly Drawing

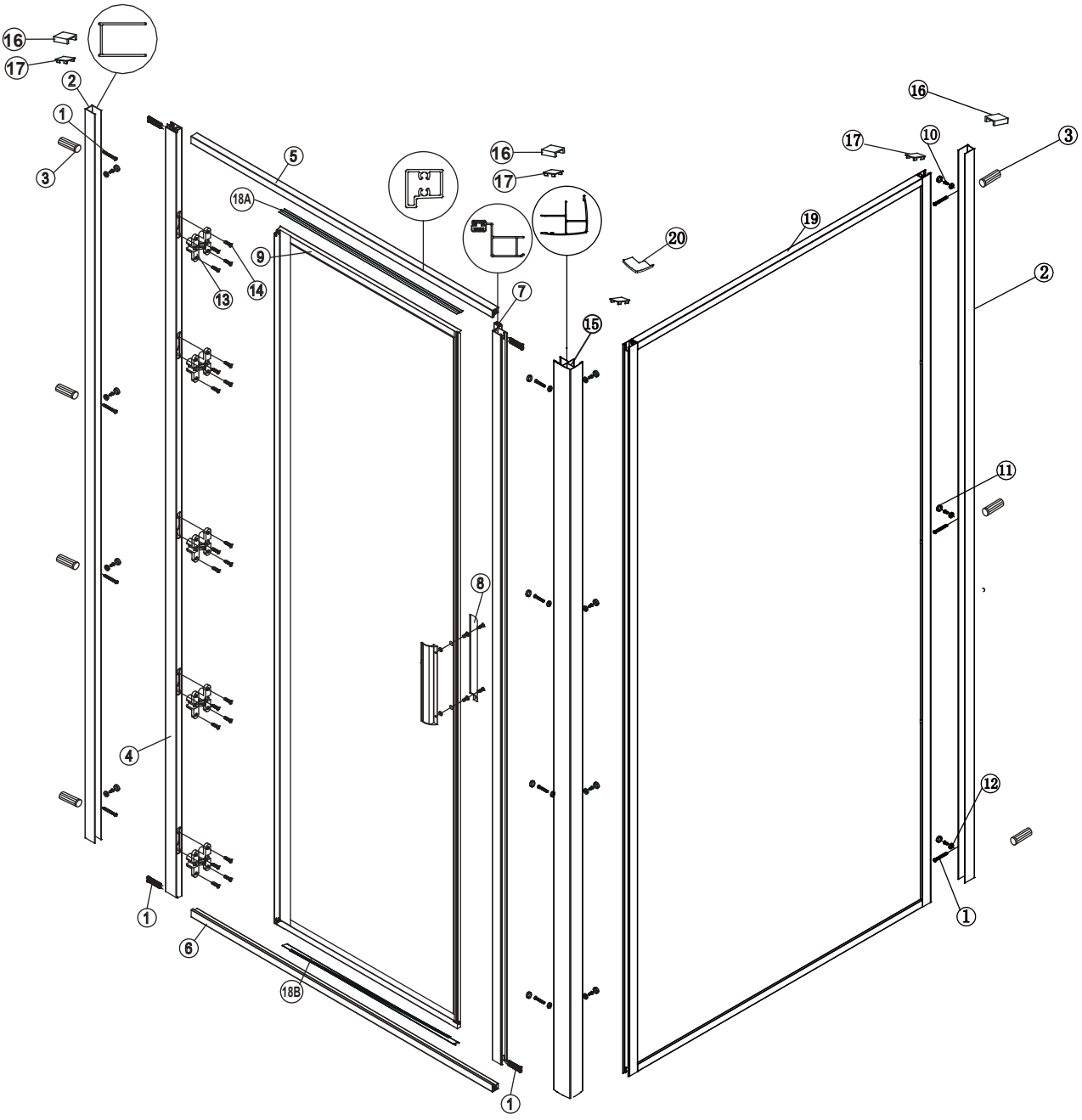

[1] 15xRound Screws M4x30
[2] 2xWall Profile
[3] 7xWall Plugs
[4] 1xHinge Profile
[5] 1xProfile
[6] 1xProfile
[7] 1xMagnetic Strip
[8] 1xHandle Set
[9] 1xDoor Panel
[10] 15xRound Screws M4x10
[11] 15xScrew Cover Caps
[12] 15xScrew Cover Caps Washer
[13] 5xHinge
[14] 20xScrews M4x18
[15] 1x90° Post
[16] 2xWall Profile Cap
[17] 4xProfile Caps
[18A] 1xTop PVC strip
[18B] 1xBottom PVC strip
[19] 1xReturn Panel
[20] 1xCap

Installation Steps

Step 1 **Mark the location of the wall profile holes on the wall**

Model	B(mm)
2120-30-FFG	285-300
2120-45-FFG	435-450
2120-60-FFG	585-600
2120-70-FFG	685-700
2120-80-FFG	785-800
2120-90-FFG	885-900
2120-100-FFG	985-1000
2120-110-FFG	1085-1100
2120-120-FFG	1185-1200
2120-130-FFG	1285-1300
2120-140-FFG	1385-1400
2120-150-FFG	1485-1500
2120-160-FFG	1585-1600

Model	A(mm)
C70D-FFG	700-720
C80D-FFG	800-820
C90D-FFG	900-920
C100D-FFG	1000-1020

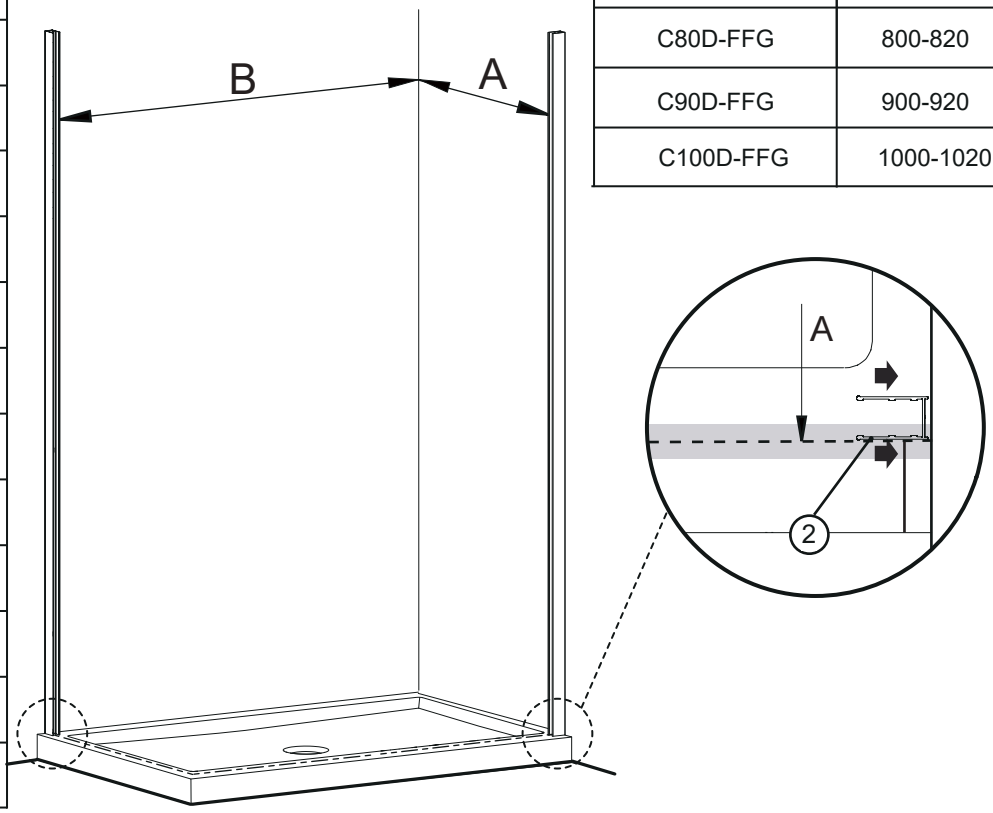

Step 2

Drill and install wall plugs on the wall

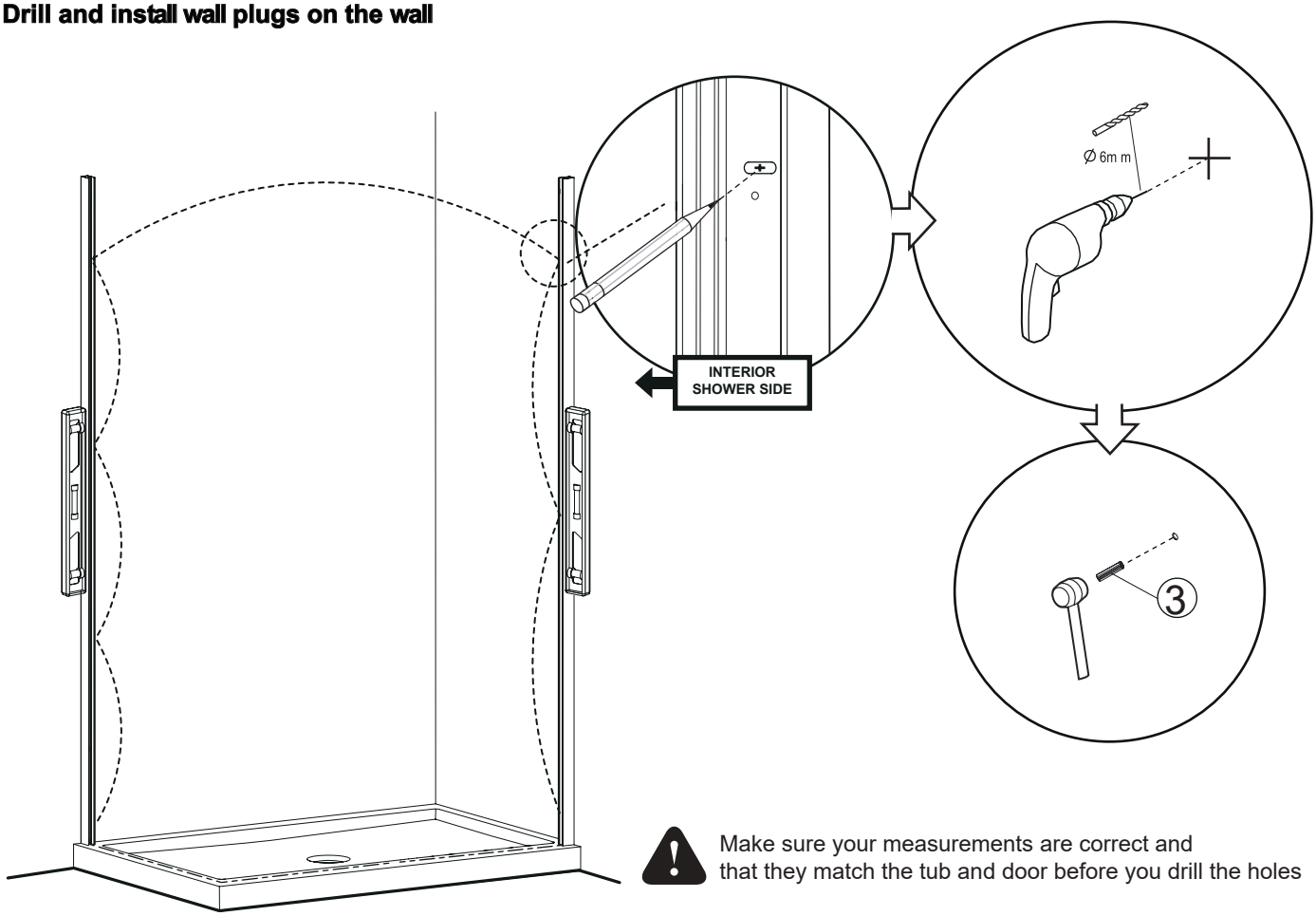

Make sure your measurements are correct and that they match the tub and door before you drill the holes

Step 3

Mark the location of the wall profile holes on the wall

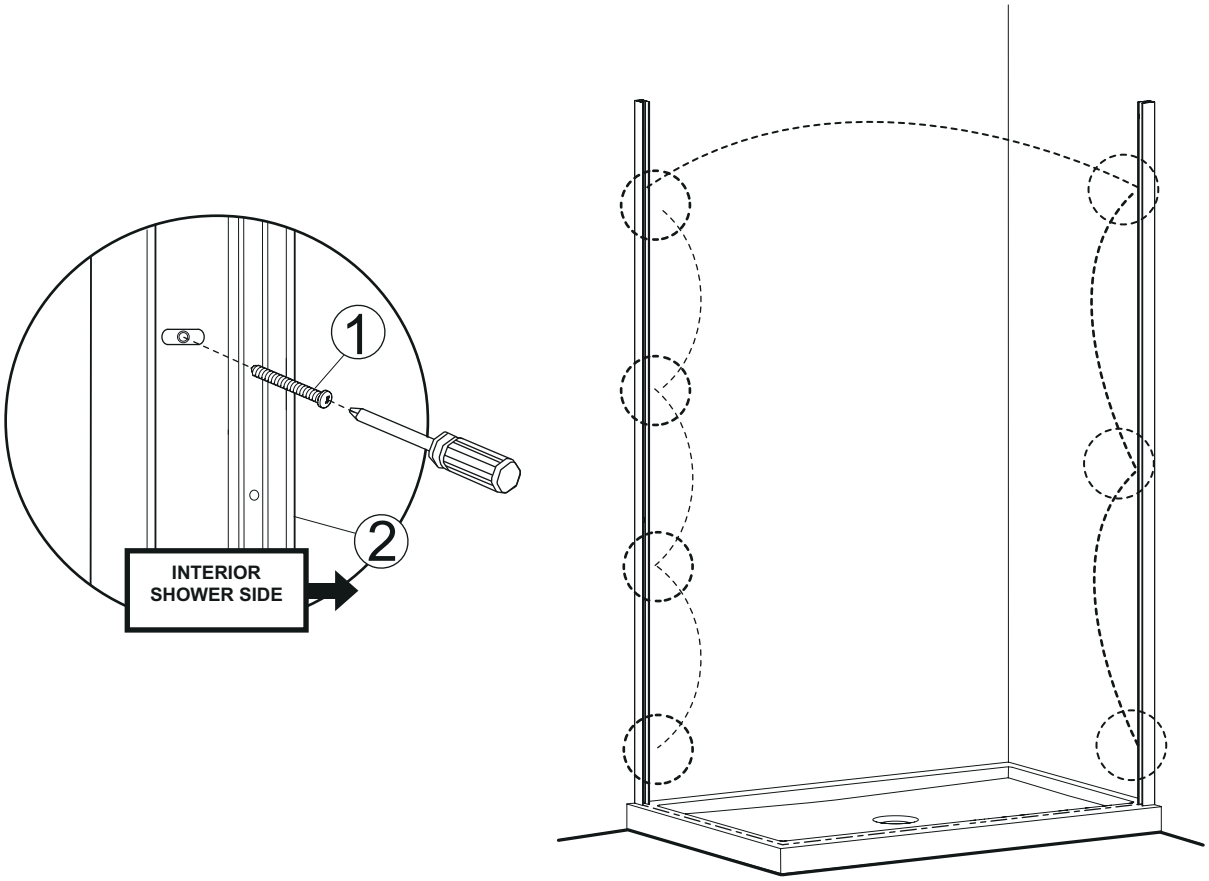

Step 4

Install the top aluminium profile

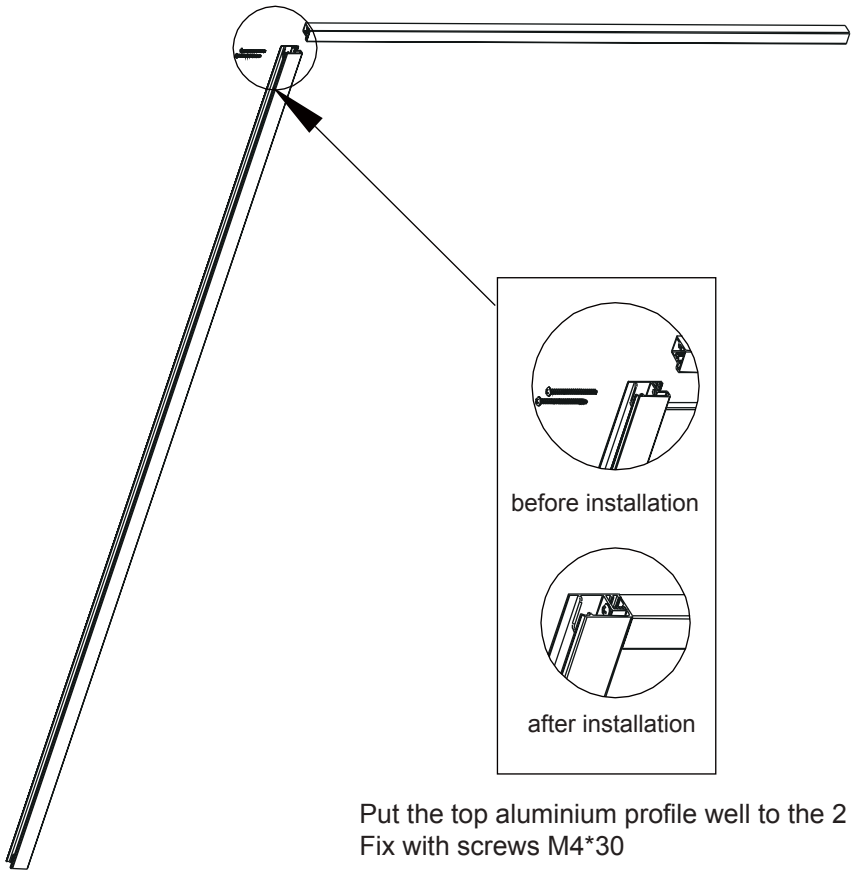

Put the top aluminium profile well to the 2 holes of front hinge profile
Fix with screws M4*30

Step 5

Install the bottom aluminium profile

Put the bottom aluminium profile well to the 2 holes of front hinge profile
Fix with screws M4*30 the

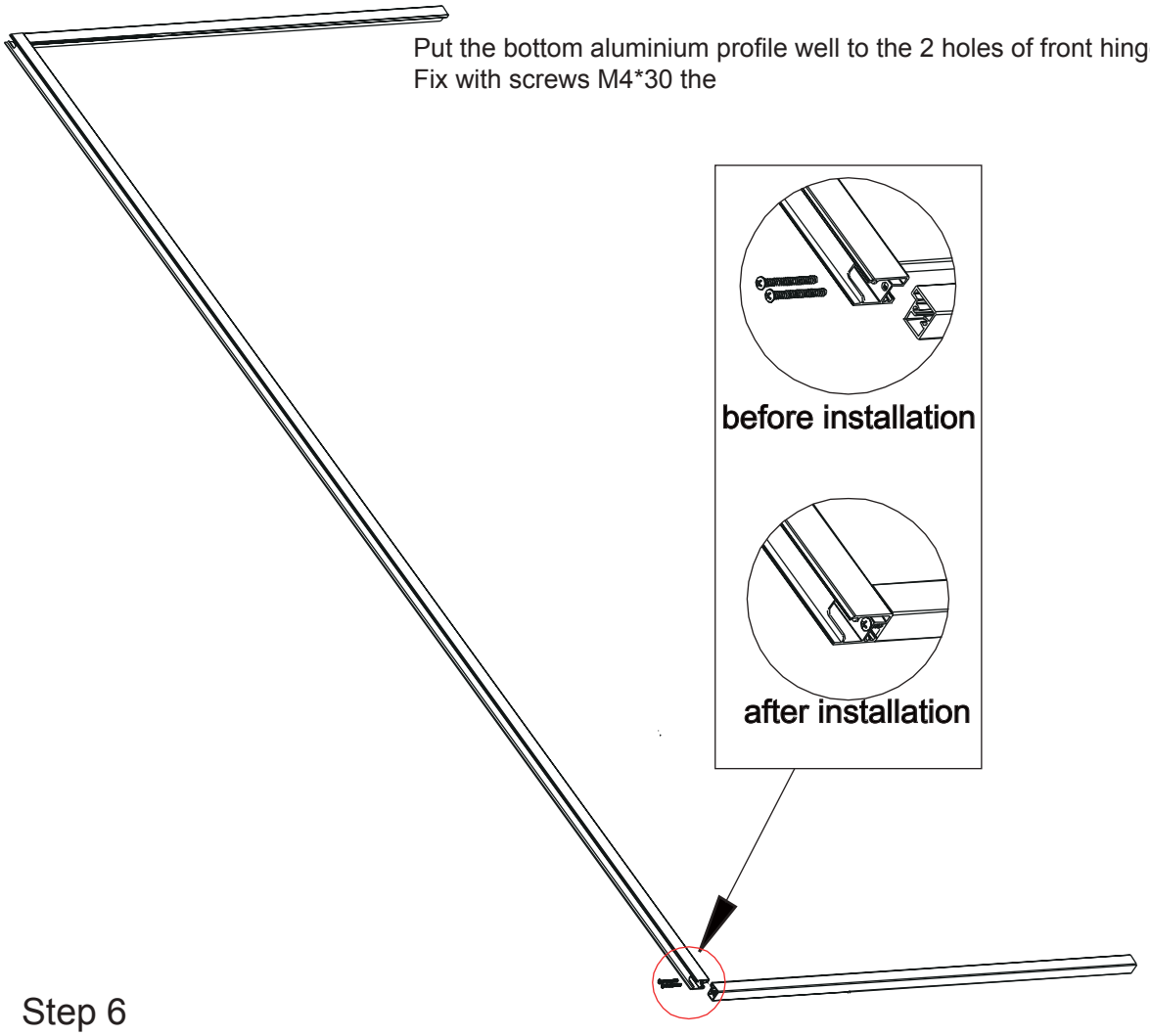

Step 6

Install magnetic aluminium profile

Put the top aluminium profile well to the 4 holes of magnetic alu.profile.
Fix with screws M4*30

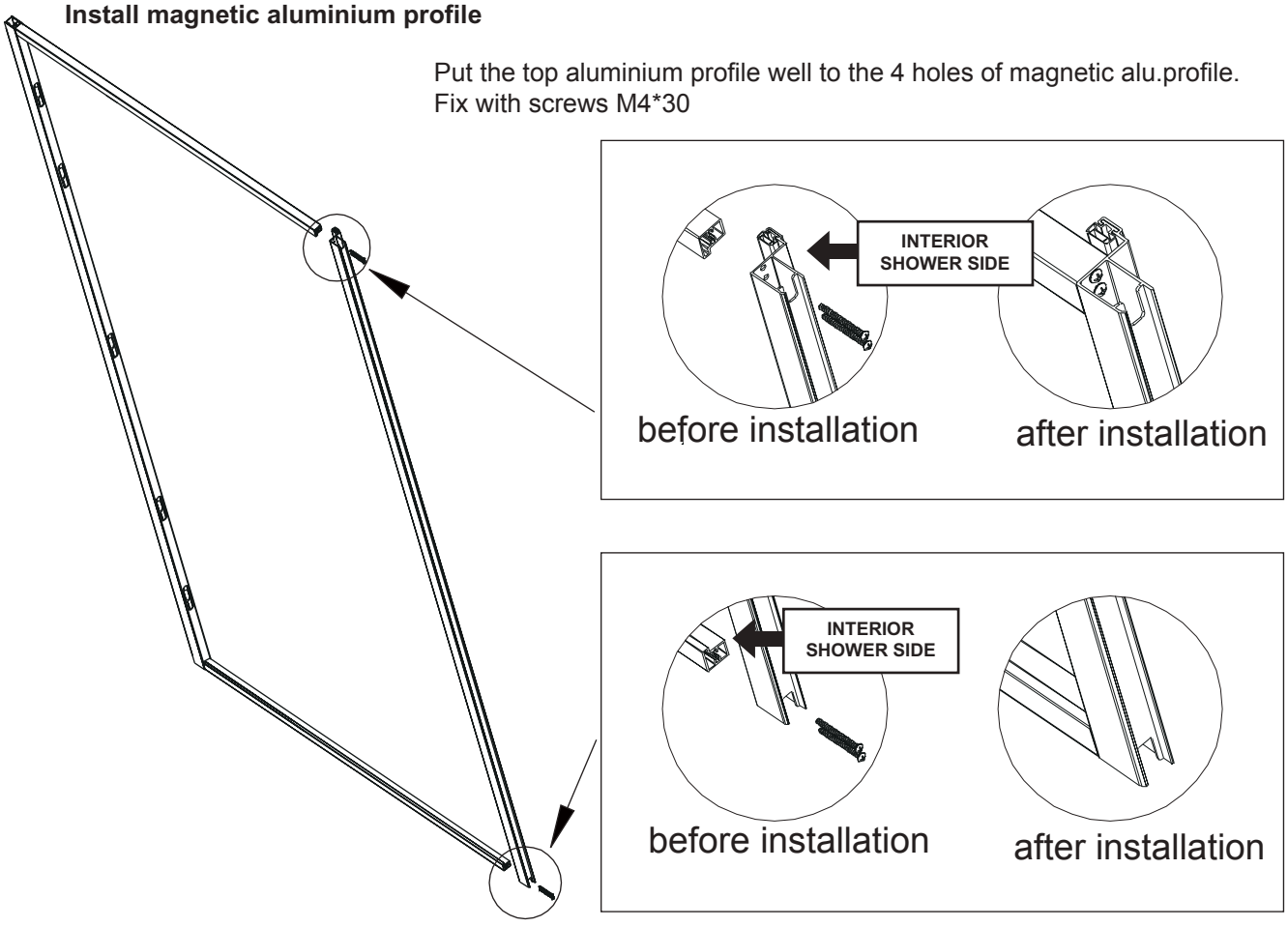

Step 7

Install the front door with wall profile

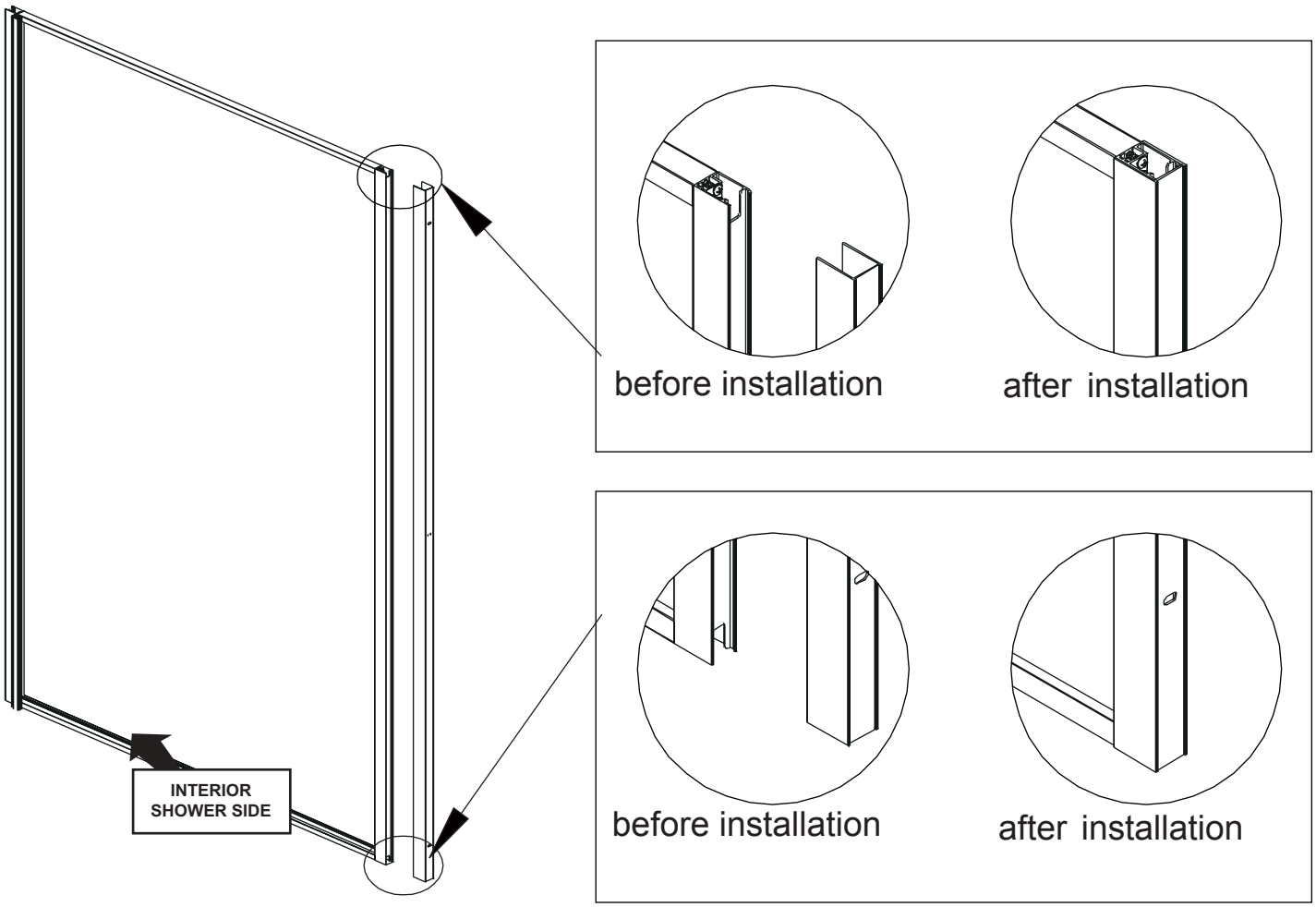

Step 8

Install the side panel with wall profile

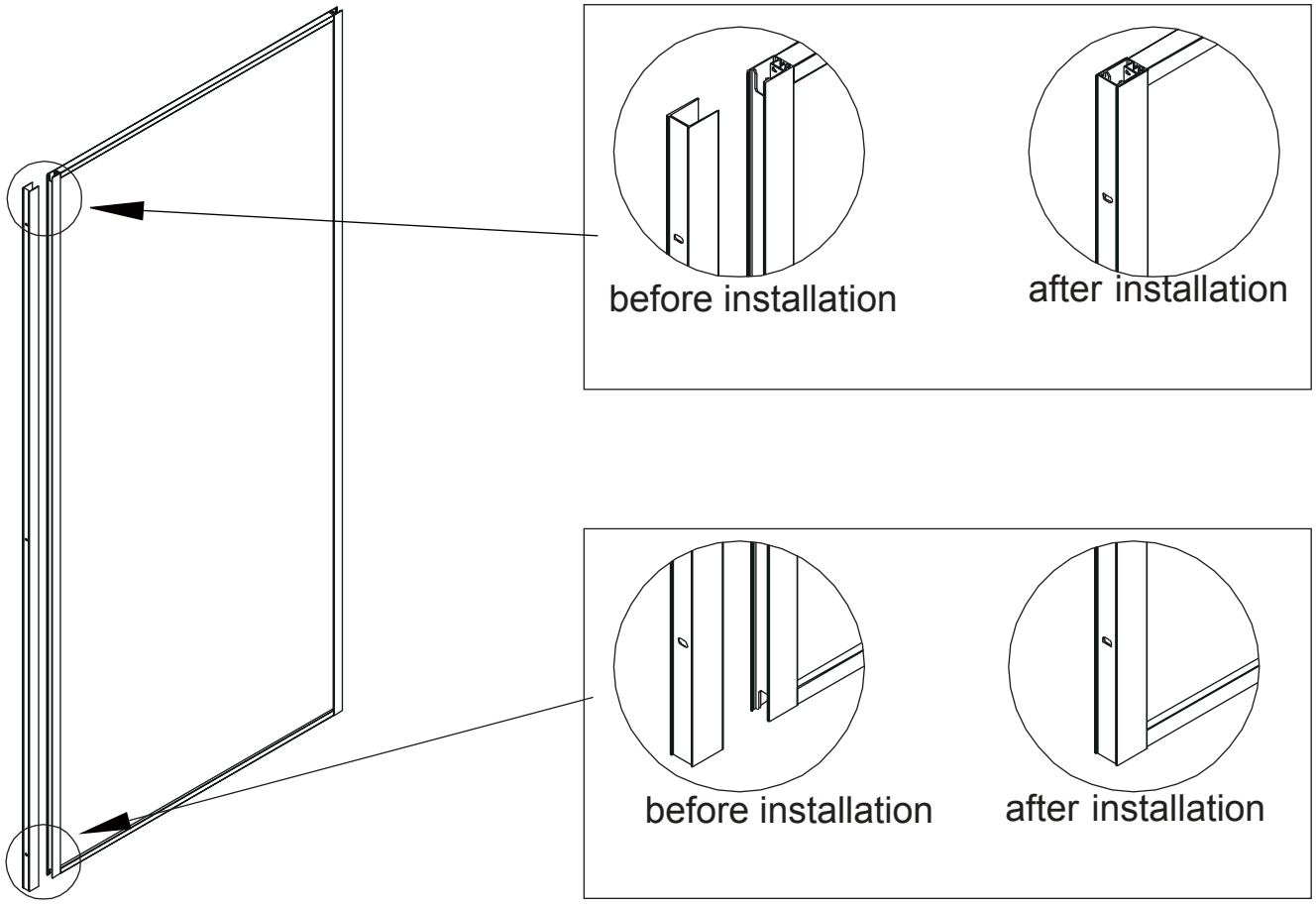

Step 9

Install corner door

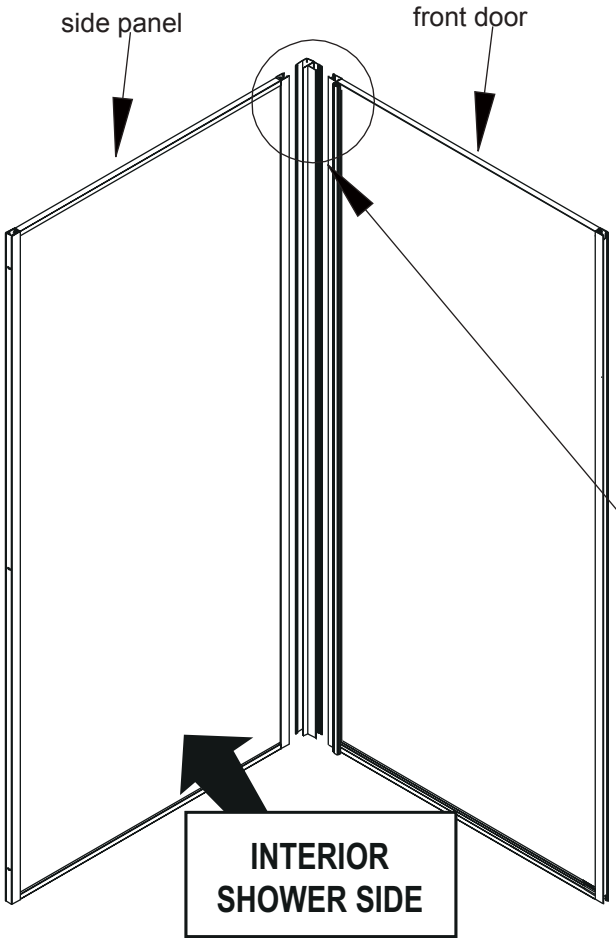

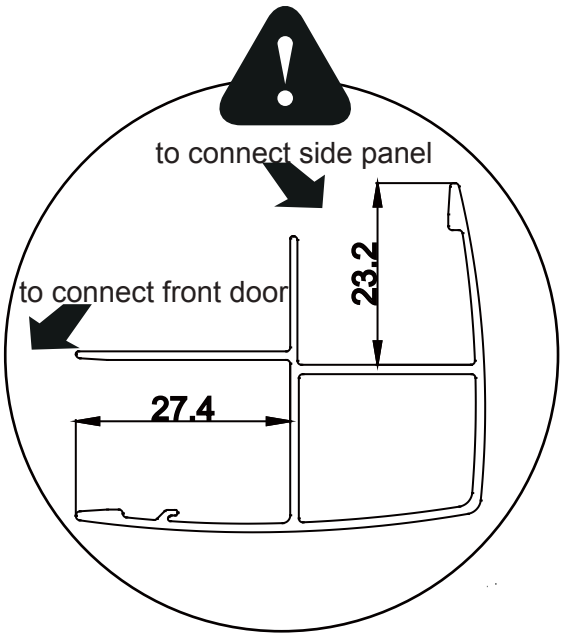

Insert the corner profile into the front door, and then insert the corner profile into the side panel
(Note : Corner profile has different direction. There's difference when installing with side panel and front door)

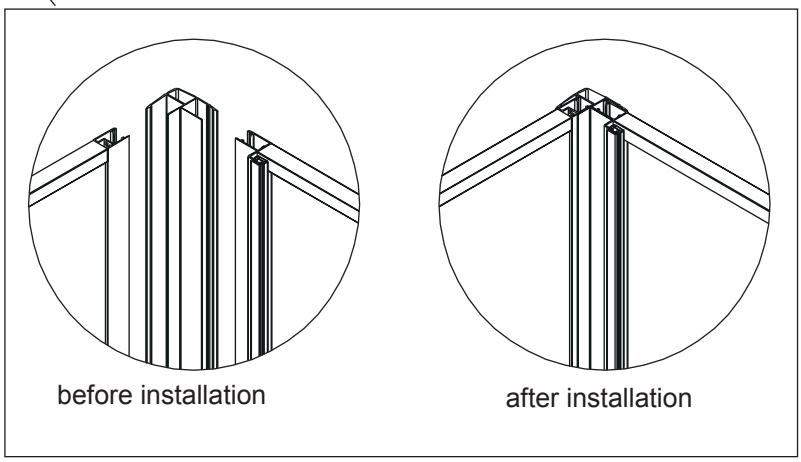

Step 10

Adjust the shower enclosure and fix

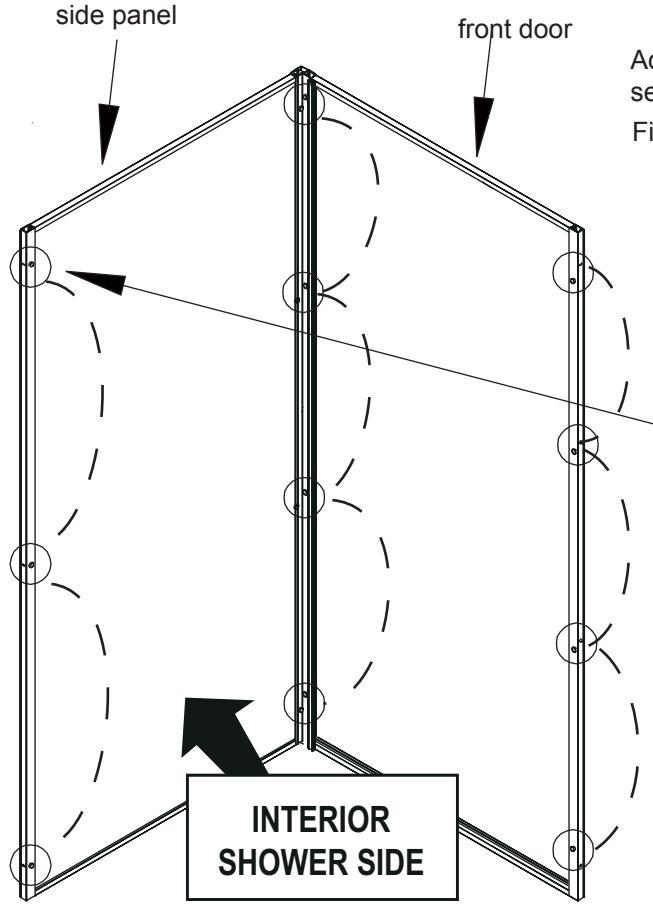

Adjust the level. Drill holes at the wall profile and corner profile separately with Φ3.2 screws

Fix the holes with M4*10 screws and caps

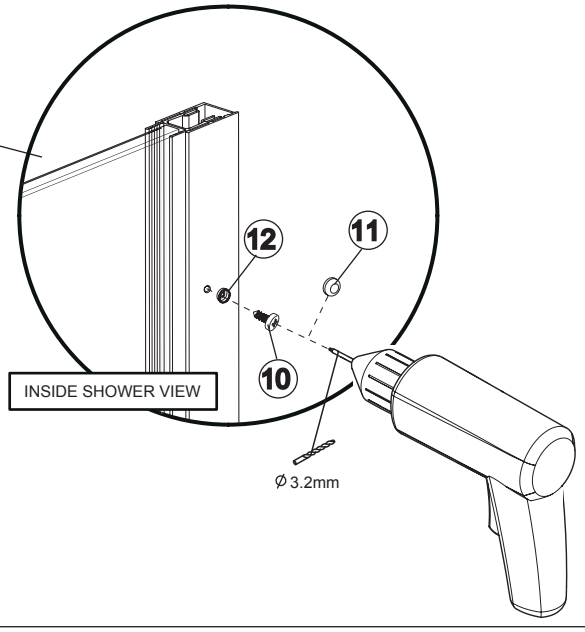

Step 11

Install hinges with the profile

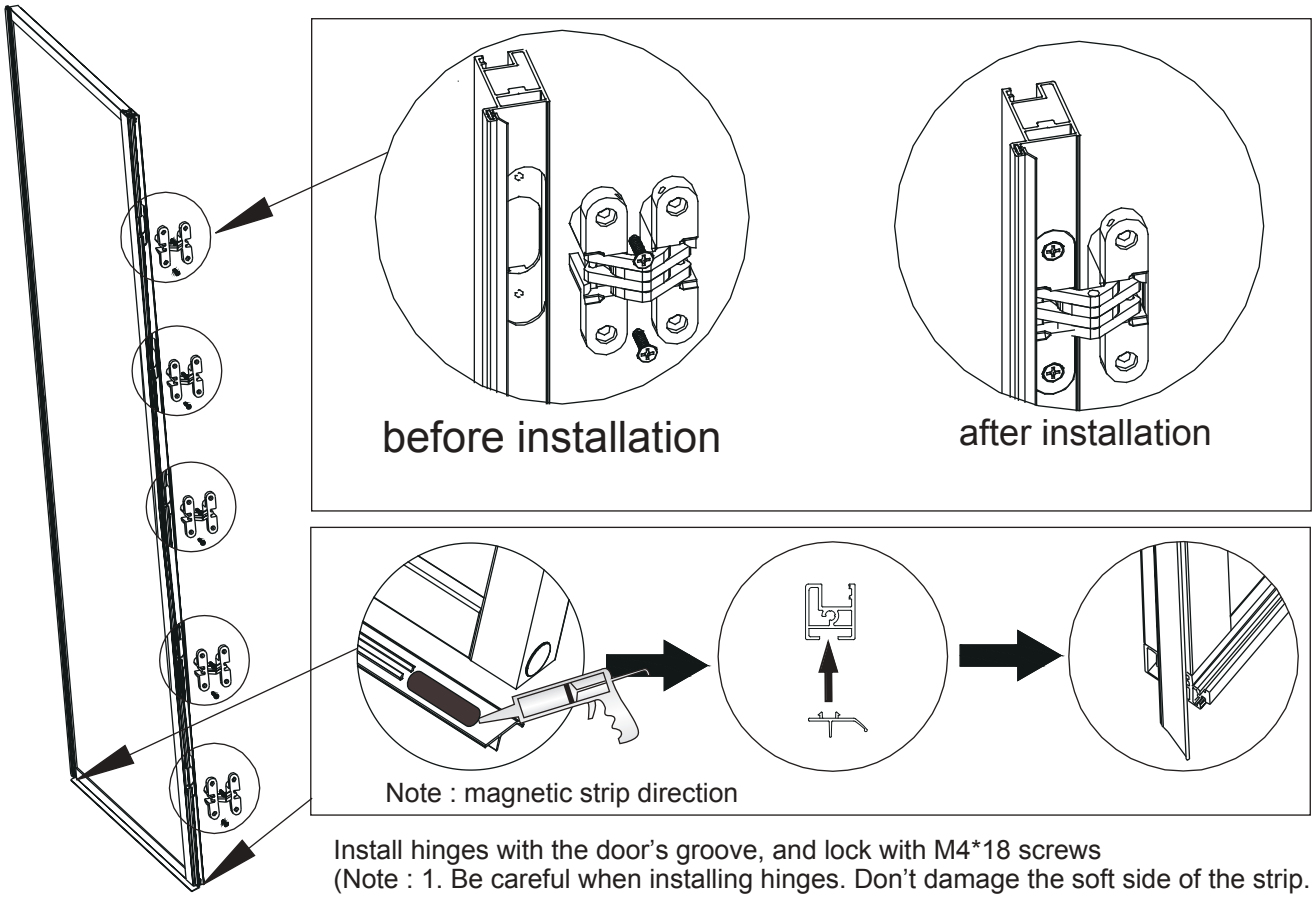

Install hinges with the door's groove, and lock with M4*18 screws
(Note : 1. Be careful when installing hinges. Don't damage the soft side of the strip.
2. The hinge opening direction should be different from closing magnetic direction.

Step 12

Install the door

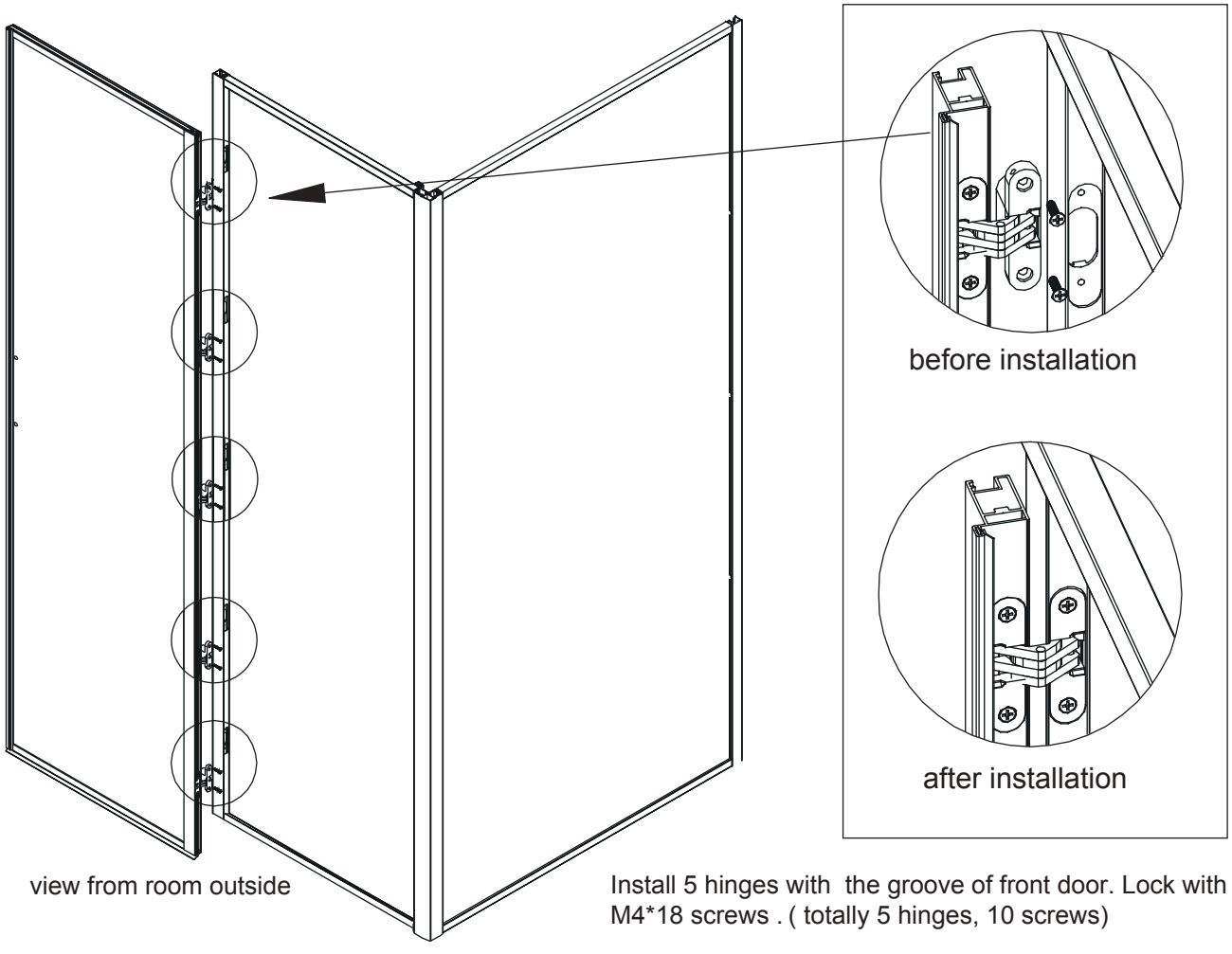

view from room outside

Install 5 hinges with the groove of front door. Lock with M4*18 screws . (totally 5 hinges, 10 screws)

Step 13

Install handle at the door

Install handle at the door. Lock with M4*18 screws (totally 2 screws)
(Note : don't miss 4pcs washers, 2pcs rings)

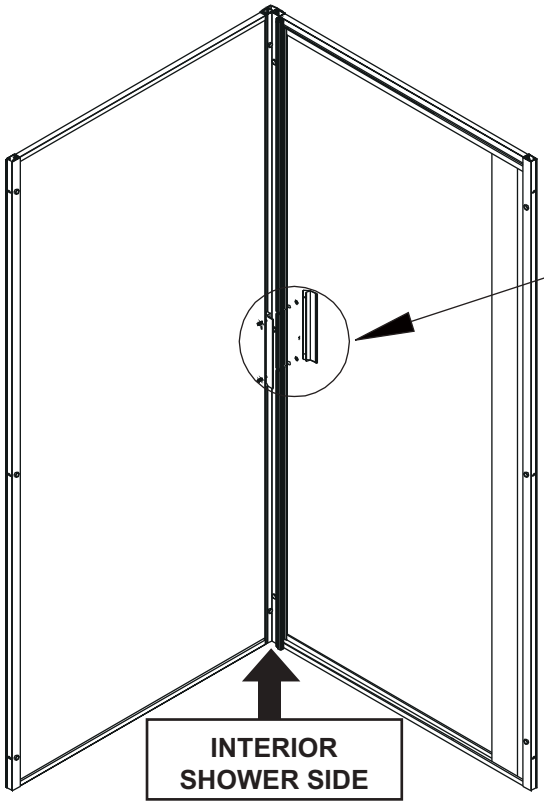

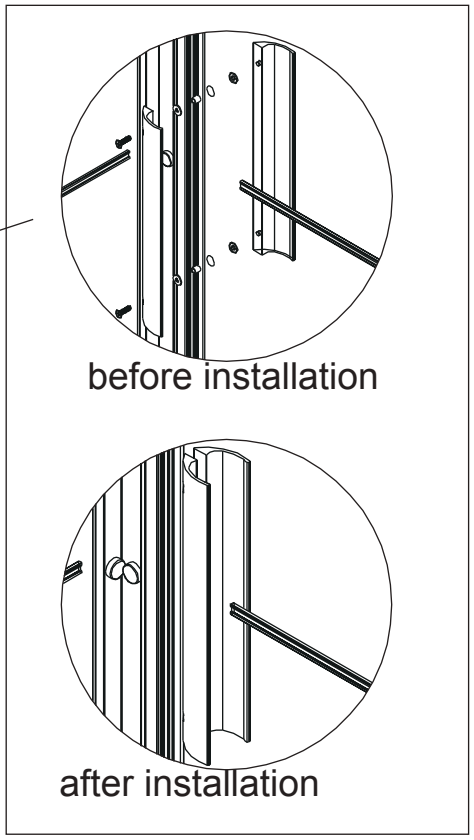

Step 14

Seal the shower unit

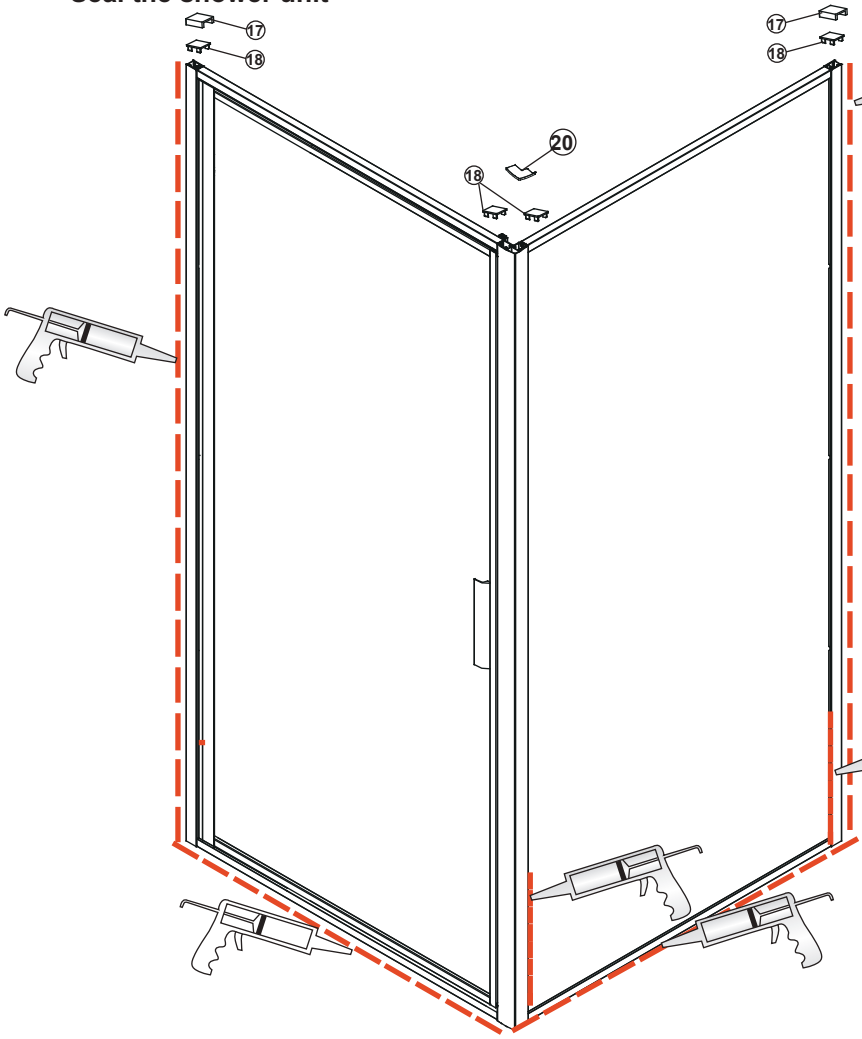

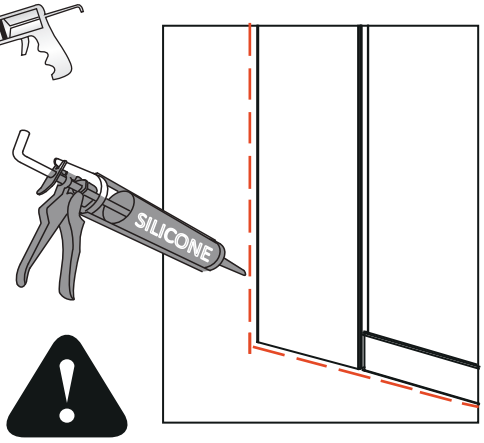

All sealant should be applied to the outside. Seal top to bottom between the wall profile and the wall.Seal the the bottom between the tray/floor and the glass/rail/profile and approx. 50mm vertically between the wall profile and the glass.

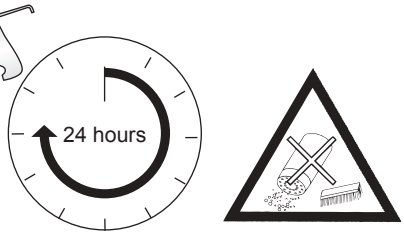

Allow 24 hours for silicone to dry before use.

Deutsch

Die nachfolgenden Pflegehinweise wird empfohlen.

Wichtig ist eine regelmäßige Pflege und Reinigung Ihrer Dusche aus Echt Glas. Es ist sinnvoll Rückstände nach jedem Duschen sofort mit klarem kalten Wasser abzuspülen. Das Abziehen mit einem Glaswischer verhindert das Festsetzen von Kalk. Flecken haben somit keine Chance. Auch die Profile bleiben lange schön, wenn diese mit einem weichen Tuch nach dem Duschen sofort trocken gewischt werden. So wird der Zeit- und Energieaufwand, im Gegensatz zu einer späteren Pflege der Dusche, bereits im Vorfeld enorm gemindert. Zudem wird ein übermäßiger Verbrauch von Putz- und Pflegemitteln auf diese Weise reduziert. Das spart Kosten und schont die Umwelt.
Beim Gebrauch von handelsüblichen Reinigungsmitteln zur Pflege sollten nach Gebrauch mit klarem Wasser komplett abgespült werden, bevor Sie die Dusche trocknen.

Verwenden Sie keinesfalls Scheuermittel, Lösungsmittel und harte scheuernde Schwämme. Denn auch kleinste Beschädigungen und Risse im Glas bieten Kalk und Schmutz einen echten Nährboden, um sich hier festzusetzen. Reinigungsmittel mit einem PH-Wert unter 3 oder über 10 beschädigen Profile, Scharniere, Griffe und Glasbeschichtungen.

Nederlands

De volgende onderhoudstips worden aanbevolen

Het regelmatig onderhouden reinigen zijn van groot belang voor uw douche.
Na het douchen, het materiaal direct afspoelen met koud water en het glas afnemen met een badkamerwisser. Dit voorkomt aanhechting van kalk.
Daarnaast de profielen afdrogen een zachte doek na het douchen. Dus is de tijd en energie, in tegenstelling tot latere onderhoud van de douche, enorm verminderd tevoren. Dit voorkomt overmatige consumptie van reinigings- en verzorgingsproducten wat bespaart en minder schadelijk is voor het milieu.
Gebruik geen schuurmiddelen, oplosmiddelen en ruwe schuursponsjes. Dit omdat zelfs de minste schade of barsten in het glas, zorgen voor nesteling van kalk en vuil. Wasmiddelen met een PH- gehalte lager dan 3 of hoger dan 10 beschadigen de profielen, scharnieren, handgrepen englas coatings.

English

The following care instructions is recommended.

Regular maintenance and cleaning is important for your shower made of glass. It is useful to rinse immediately with plenty of cold water, after every shower. Stripping with a glass wiper prevents the adherence of lime. Spots thus have no chance. The profiles are sure to last, when theyare wiped dry immediately with a soft cloth after showering. So is the time and energy, as opposed to later maintenance of the shower,
diminished enormously in advance. In addition, excessive consumption of cleaning and care products is reduced in this way. This saves money and protects the environment.
Do not use abrasives, solvents and harsh abrasive sponges. Because even the slightest damage and cracks in the glass, provide lime and dirt a real breeding ground in order to establish themselves here. Detergents with a PH below 3 or above 10 damage profiles, hinges, handles and glass coatings.

Français

Les instructions d'entretien suivantes sont recommandées.

L'entretien régulier et le nettoyage sont importants pour votre douche en verre. Il est utile de se rincer immédiatement et abondamment avec de résidus d'eau froide après chaque douche. Décapage avec un essuie-glace de verre empêche l'adhérence de la chaux. Spots ont donc aucune chance. Les profils sont sûrs de durer, quand ils sont immédiatement séchés avec un chiffon doux après la douche. Donc, est le temps et de l'énergie, par opposition à l'entretien ultérieur de la douche, diminué énormément à l'avance. En outre, la consommation excessive de nettoyage et d'entretien est réduite de cette manière. Cela permet d'économiser de l'argent et protège l'environnement.

Ne pas utiliser de produits abrasifs, des solvants et des éponges abrasifs. Parce que même le moindre dommage et des fissures dans le verre fournissent la chaux et la saleté d'un véritable terreau pour se mettre en place ici. Détergents avec un PH inférieur à 3 ou supérieur à 10 profils de dommages, des charnières, des poignées et des revêtements en verre.





